MOTU00001MM

BECOME MOSQUITOR

The Evil Energy-Draining insectoid

FULLY ILLUSTRATED ASSEMBLY INSTRUCTIONS

Assembly Instructions Artwork © Glen Coleman 2012

MAY REQUIRE SOME OR ALL OF THE FOLLOWING TOOLS

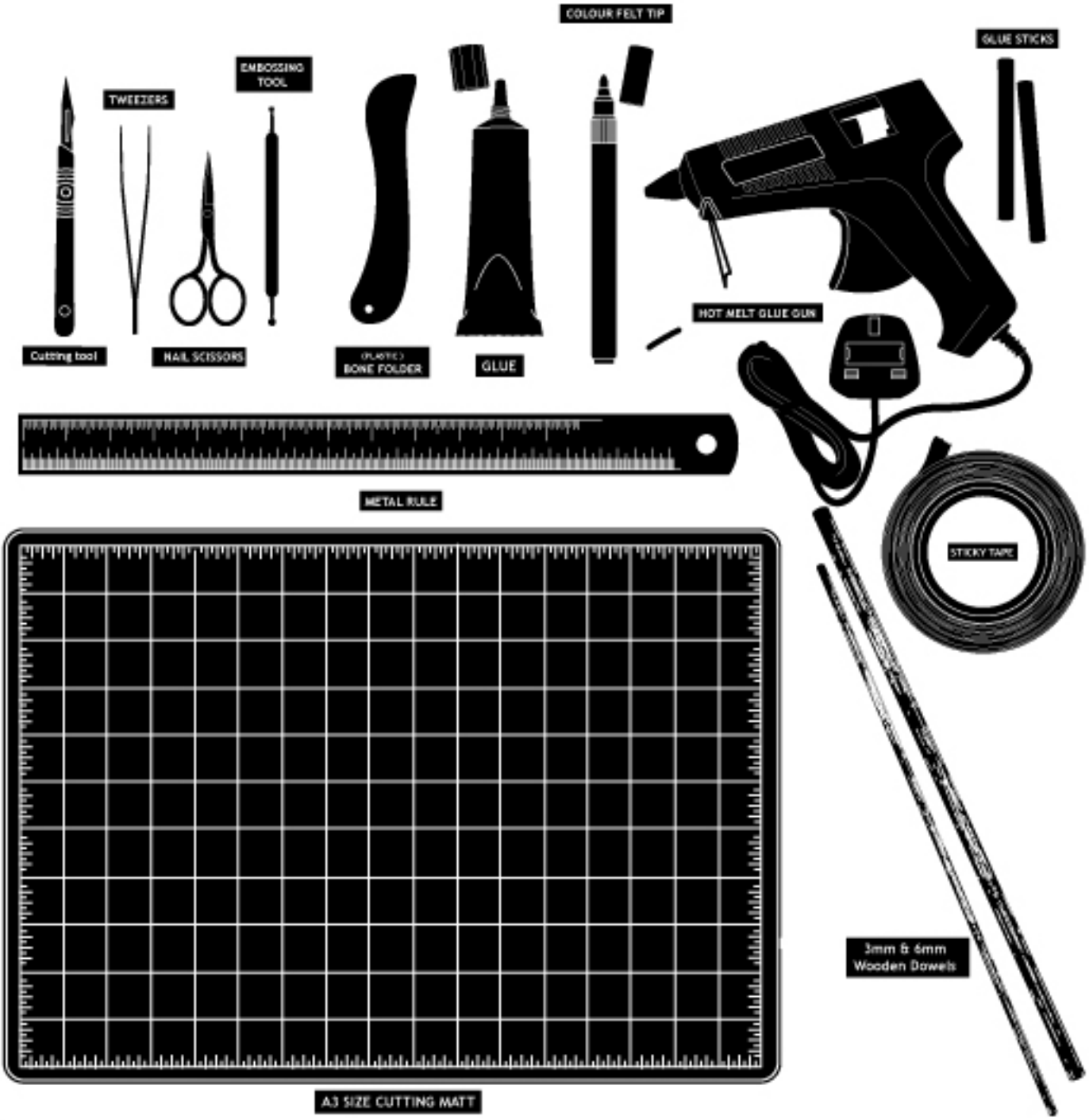

SYMBOL GUIDE

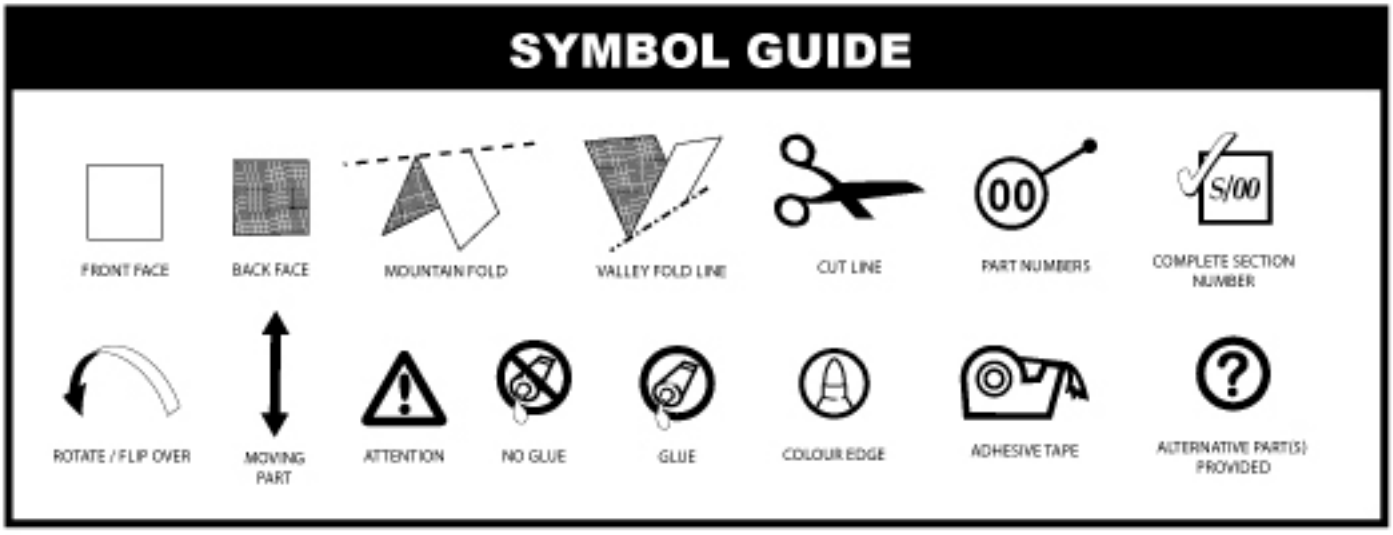

Mask Paper Engineering © Glen Coleman 2012

Mask Paper Engineering © Glen Coleman 2012

READ THIS BEFORE YOU BEGIN

Congratulations on downloading this awesome free mask, designed by Glen Coleman specifically to help Pixel-Dan meet the challenge set by Scott 'ToyGuru' Neitlich.

The information provided regarding any craft materials, tools, the component parts and their assembly order is regarded as provisional advice only. The tools you ultimately choose to use and the manner in which you use them is down you and is therefore your sole responsibility alone. No one, other than yourself, can be held accountable for any injury you might inflict upon yourself during the making of this mask. If you do not feel confident in your ability to cut out the shapes in a safe and controlled manner please get someone to help cut them out for you. By Making this model you agree to these terms.

Carefully study the illustrated step by step instructions before you begin making and assembling this mask at your own pace. It may be necessary to trim down some of the glue tabs in a few areas after they have been folded over allowing for a slightly neater fit.

PLEASE NOTE:

- The glue tabs have not been illustrated within most of these diagrams.
- Each part is identified by a number 01
- Assembled parts from small subsections, each subsection is identified by a new number S/01
- Make sure you have a clear flat surface to work on
- Use a suitable cutting tool with which you are most confident using (refer to statement above)
- For best results use an embossing tools and steel ruler to make the required crease marks
- Avoid paper cuts by not running your fingers along the edge of freshly cut paper.
- Smooth down the burred cut edge using a bone folder (see tool section)
- Camouflage the white cut edge with matching coloured marker where indicated
- Check the fit of each piece before permanently gluing in place
- Use a liquid craft glue suitable for paper or card. (PVA glue) recommended
- A thin application of glue will prevent it from bleeding out onto the artwork when glued parts are pressed together
- For best results use wooden dowels to curl the paper
- When gluing two curved surfaces, press together over a wooden dowel to help maintain the curvature

Watch Glen's Youtube video to get additional tips on how you can achieve a professional finish.
Please recycle any scrap paper or card left over form this kit.

DISCLAIMER

This paper model is not currently endorsed by Mattel, and is a fan creation intended for entertainment purposes only which has been provided for free by the designer of this kit Glen Coleman. All models are unique in their design but make some reference to the Masters of the Universe. All Mattel names and or logos are registered trademarks and or copyright of Mattel or their respective trademark and copy write holders. The official Mattel site can be found at, www.mattycollector.com
All original content of this product including it's Paper engineered nets, Illustrations, assembly graphics, icons, logos etc. are the intellectual property of Glen Coleman (projectcutter).

1

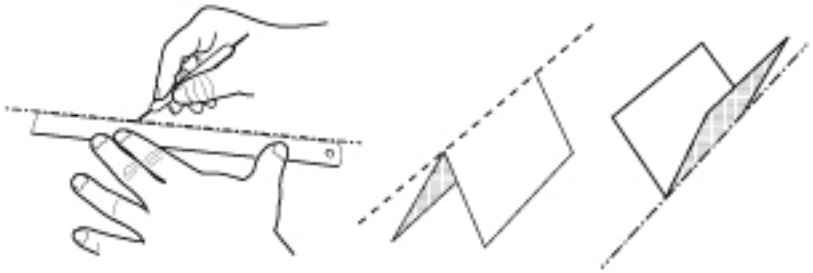

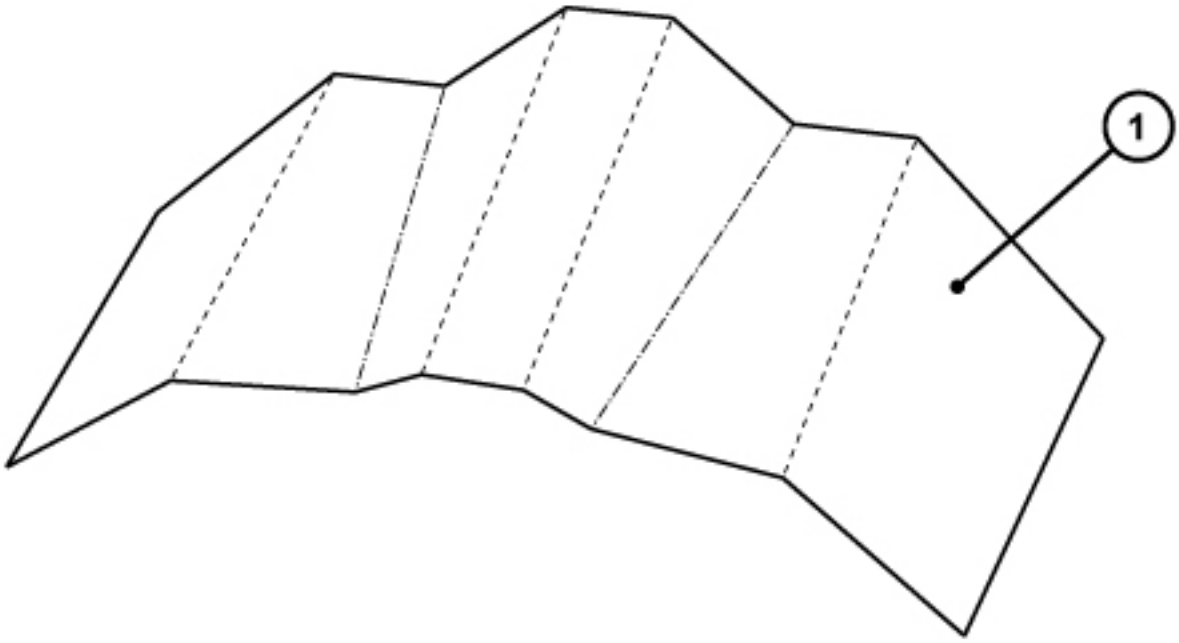

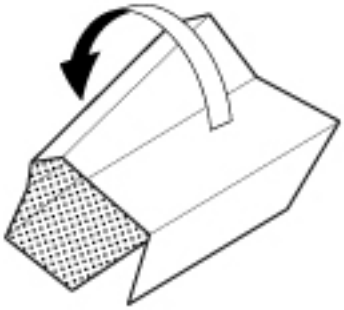

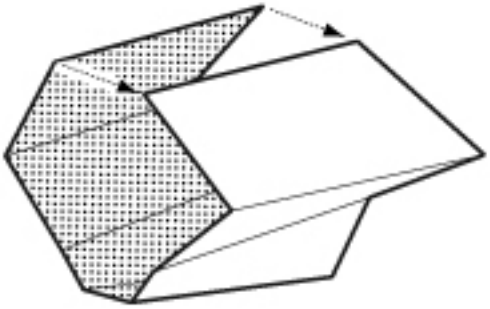

Mask Paper Engineering © Glen Coleman 2012

Assembly Instructions Artwork © Glen Coleman 2012

Mask Paper Engineering © Glen Coleman 2012

2

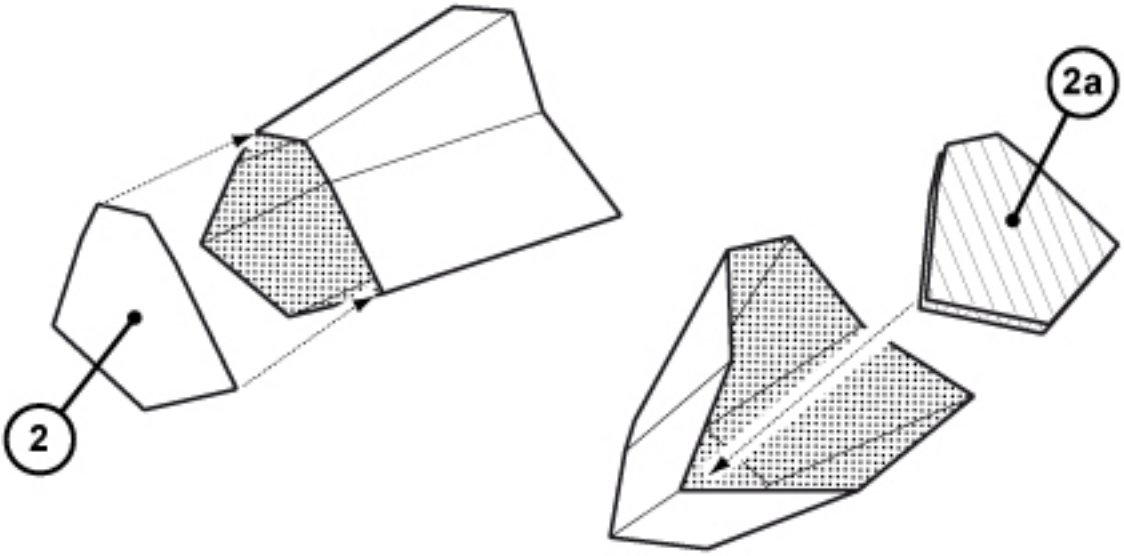

3

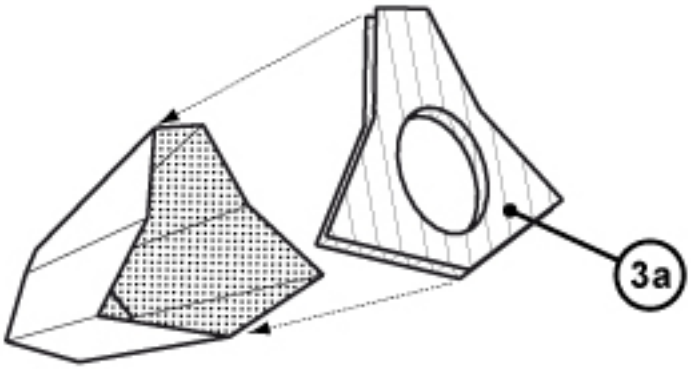

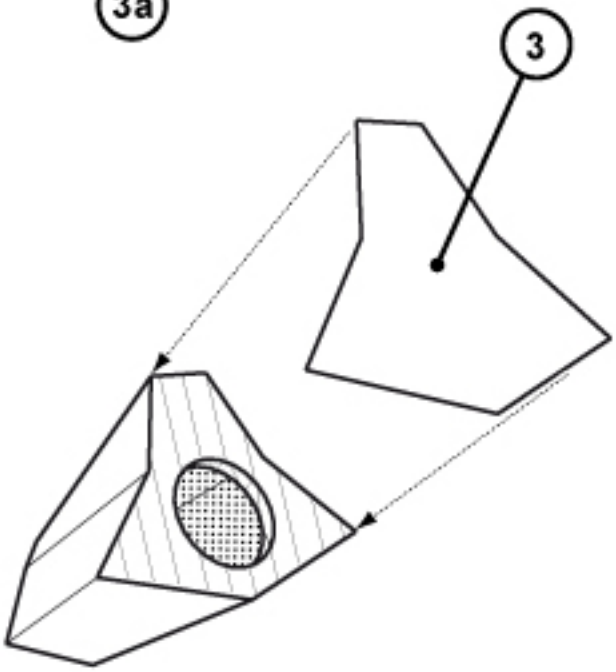

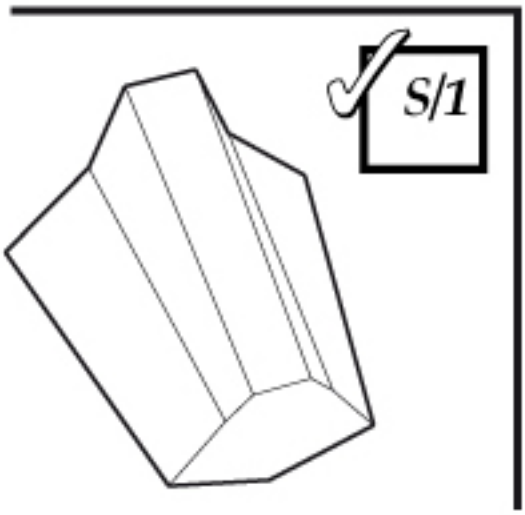

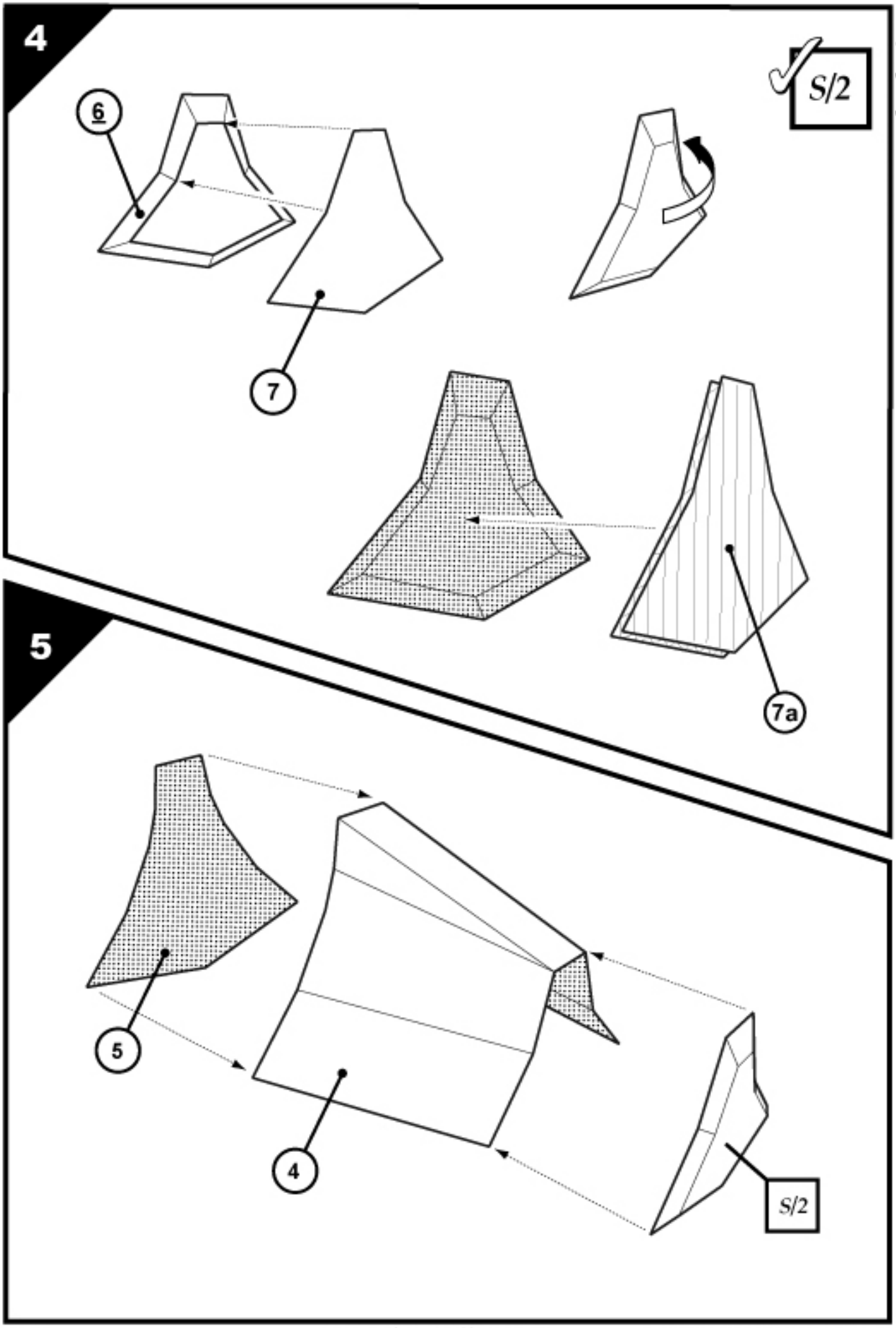

Mark Paper Engineering © Glen Coleman 2012

Assembly Instructions Artwork © Glen Coleman 2012

Mask Paper Engineering © Glen Coleman 2012

6

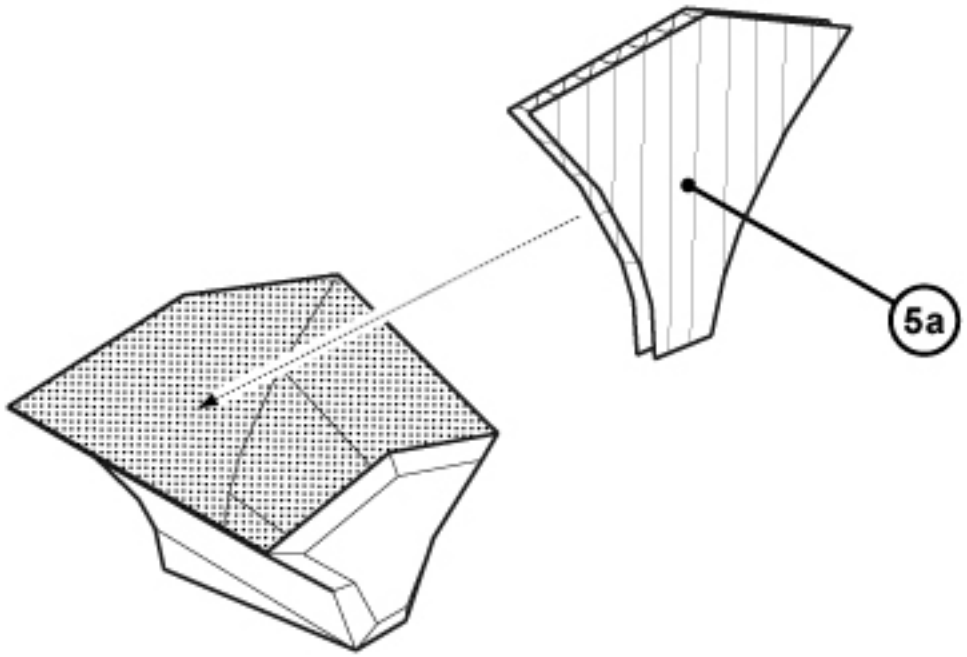

7

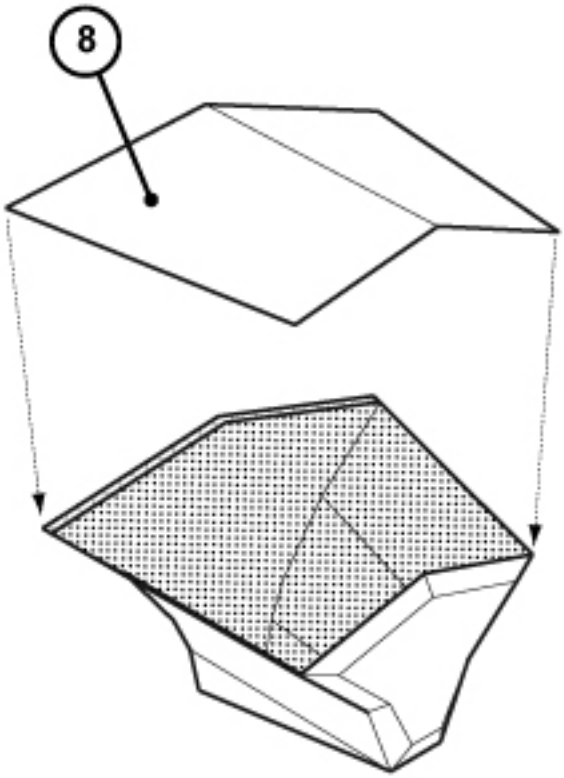

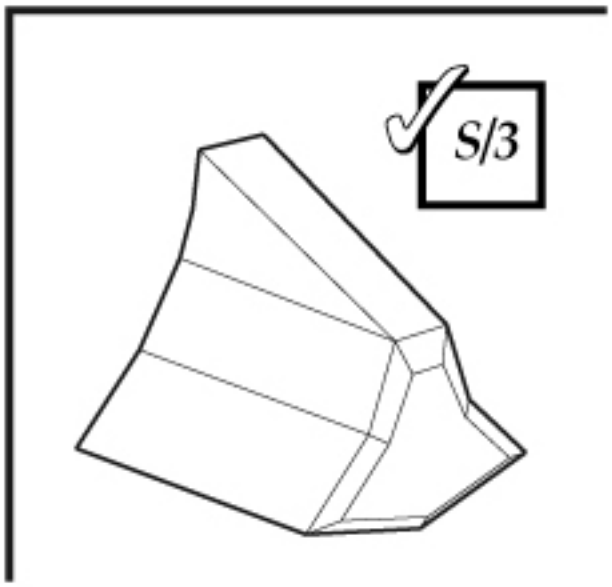

Mask Paper Engineering © Glen Coleman 2012

8

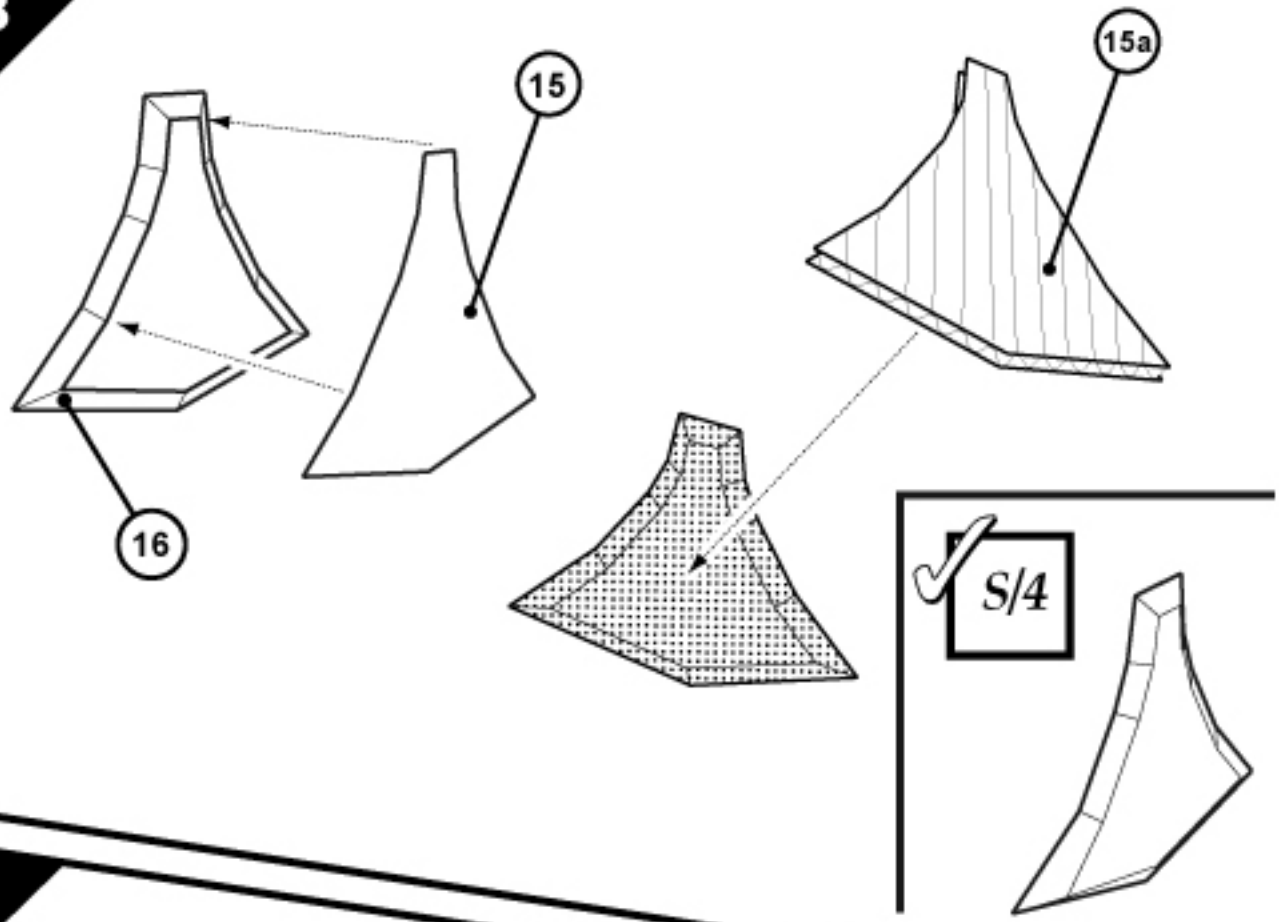

9

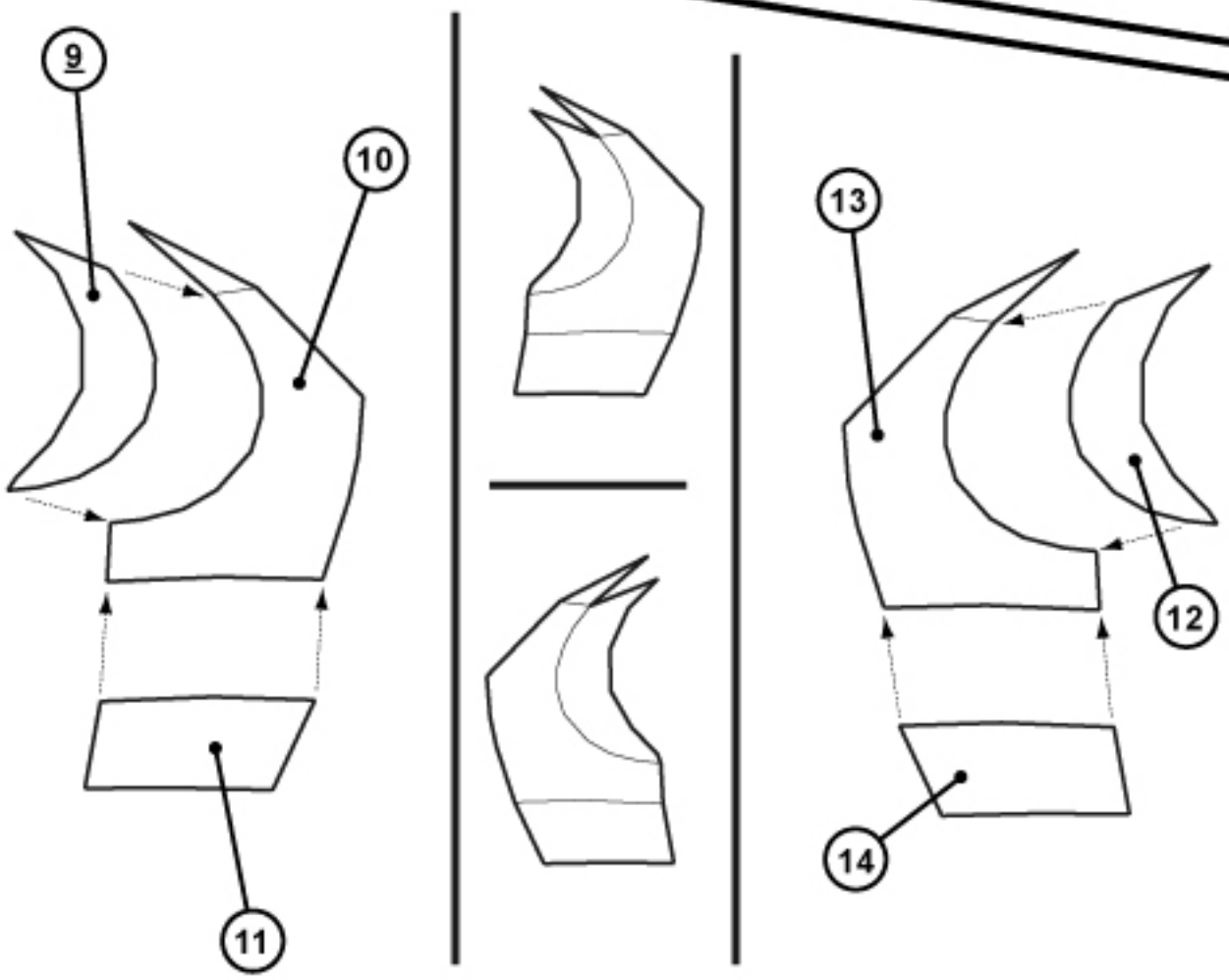

Assembly Instructions Artwork © Glen Coleman 2012

Mask Paper Engineering © Glen Coleman 2012

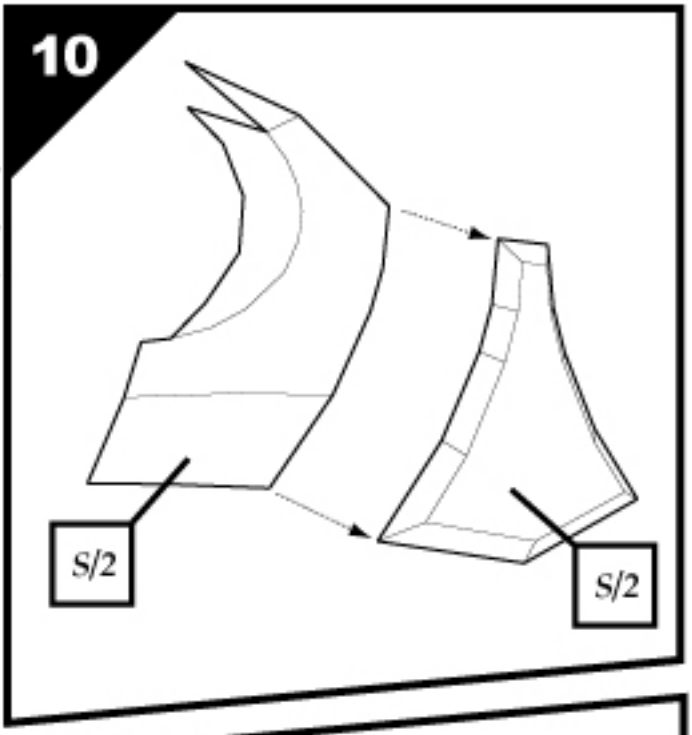

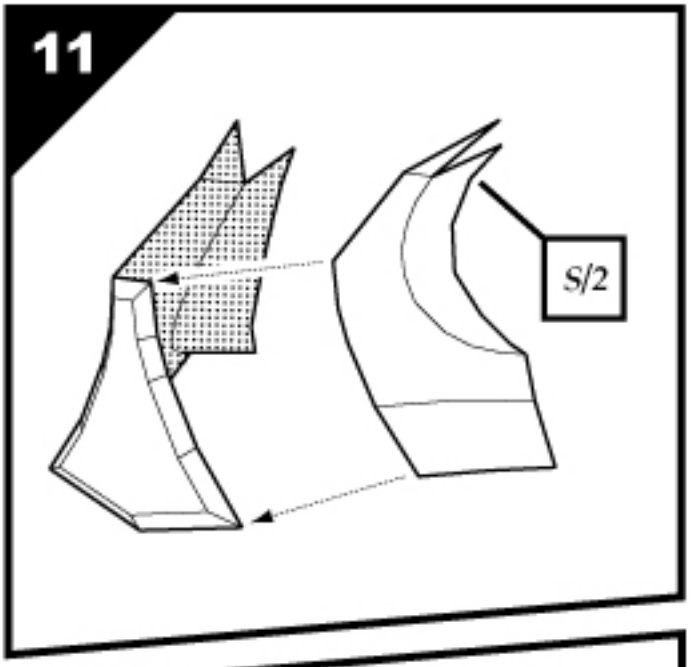

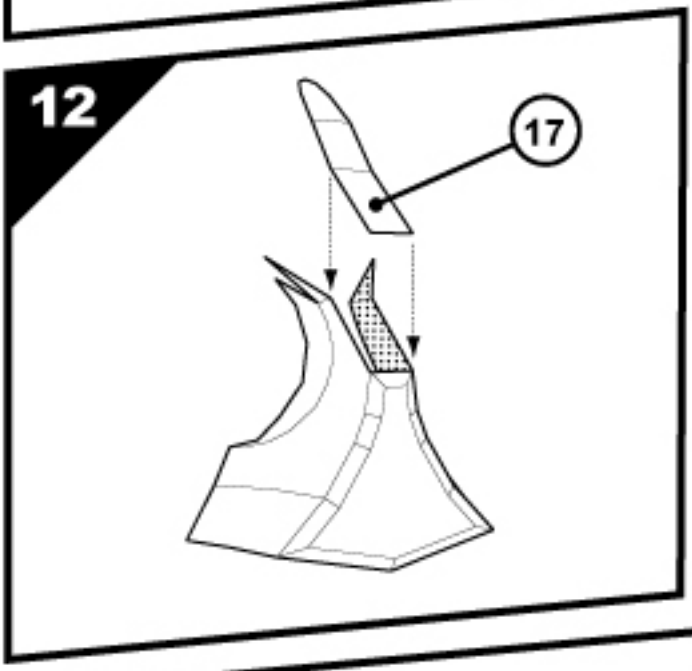

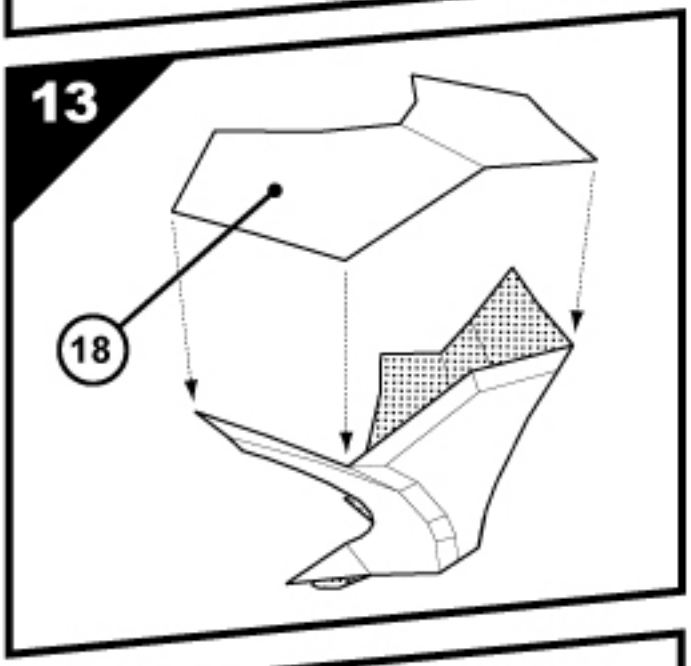

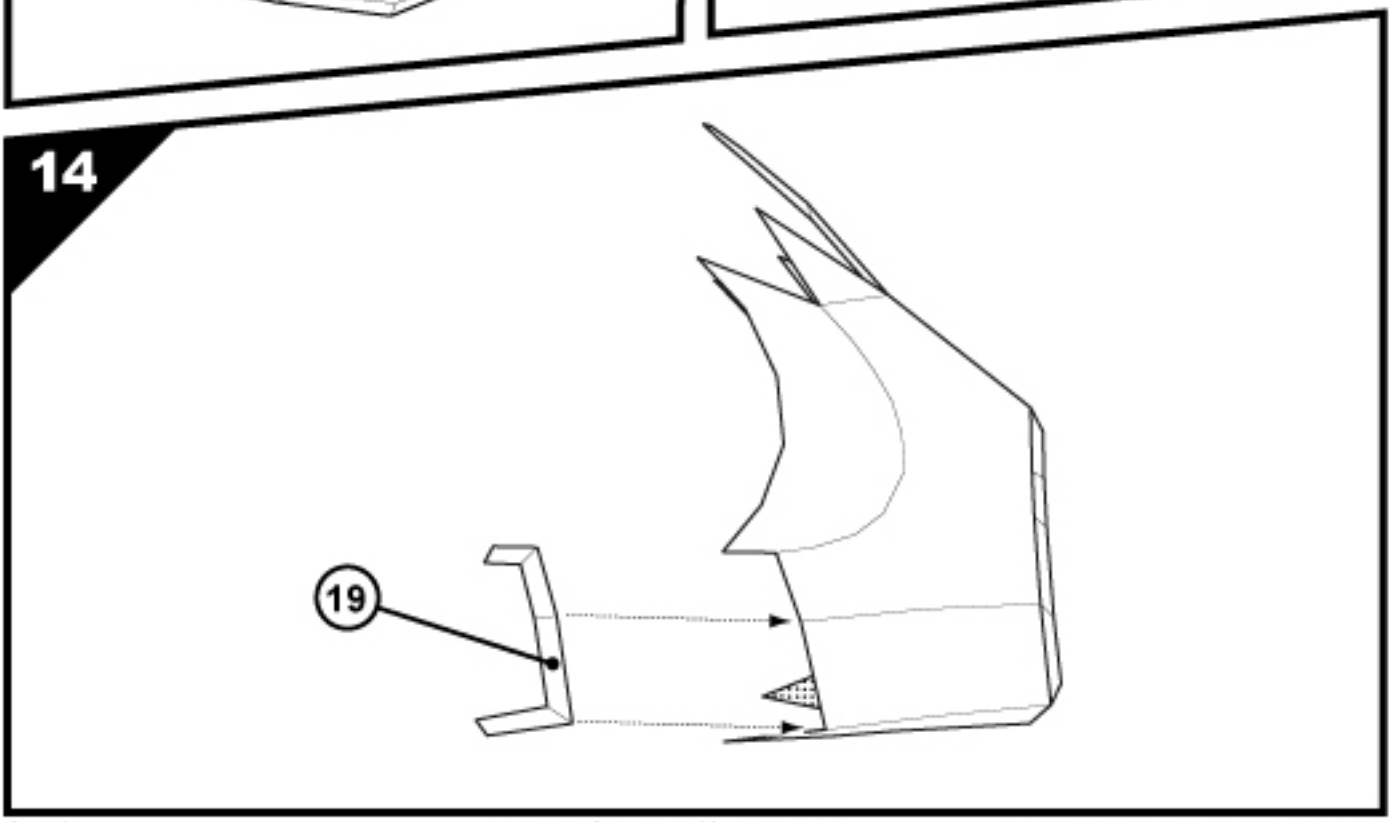

Assembly Instructions Artwork © Glen Coleman 2012

Mask Paper Engineering © Glen Coleman 2012

15

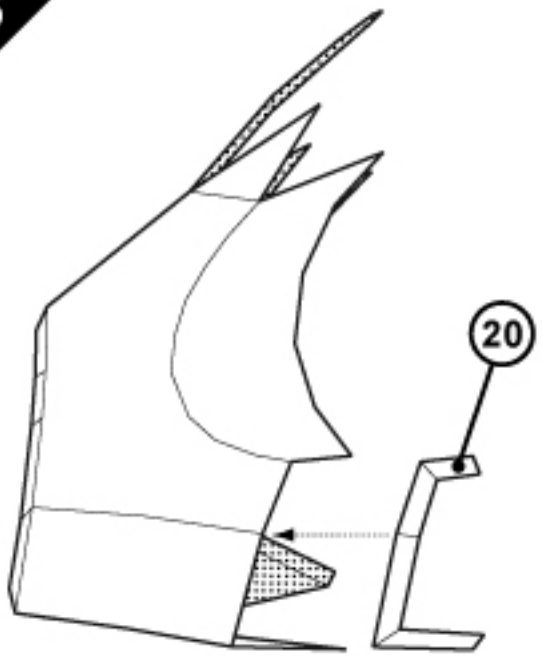

S/5

16

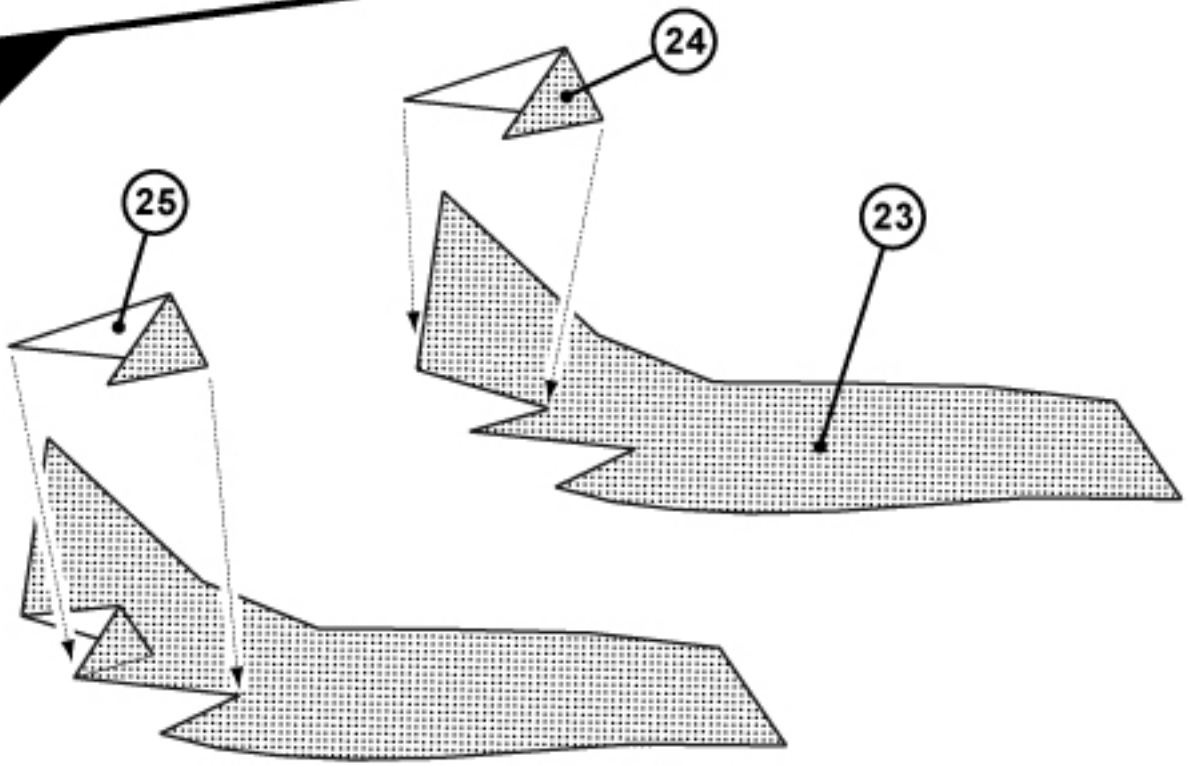

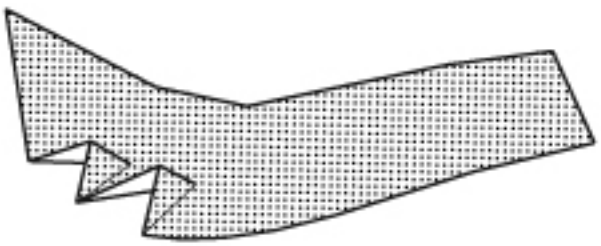

S/6

Assembly Instructions Artwork © Glen Coleman 2012

Mask Paper Engineering © Glen Coleman 2012

17

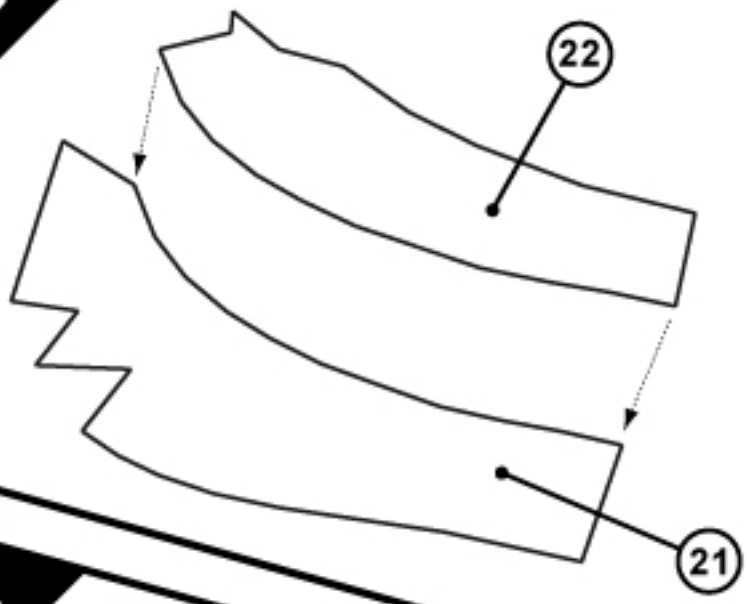

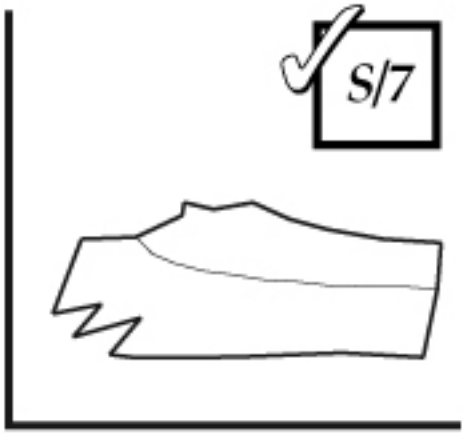

18

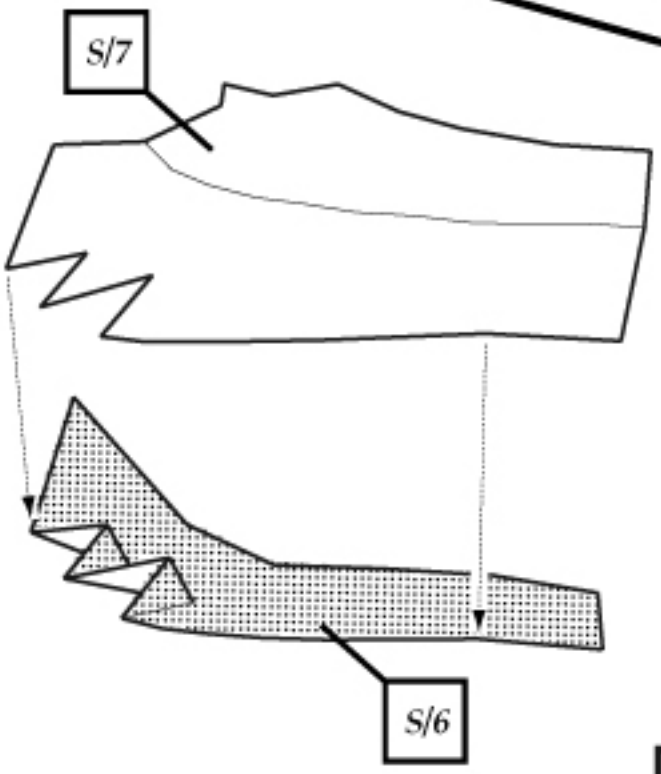

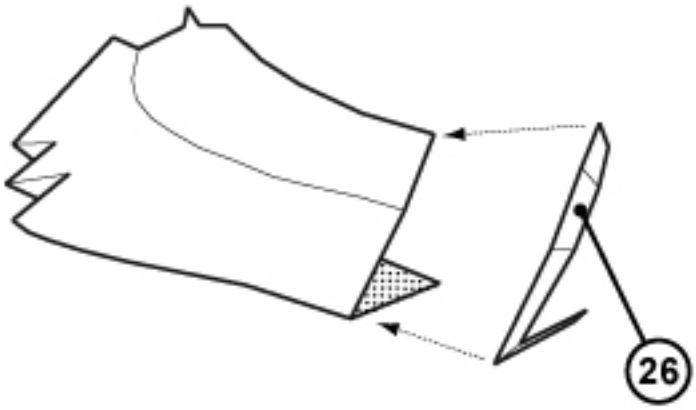

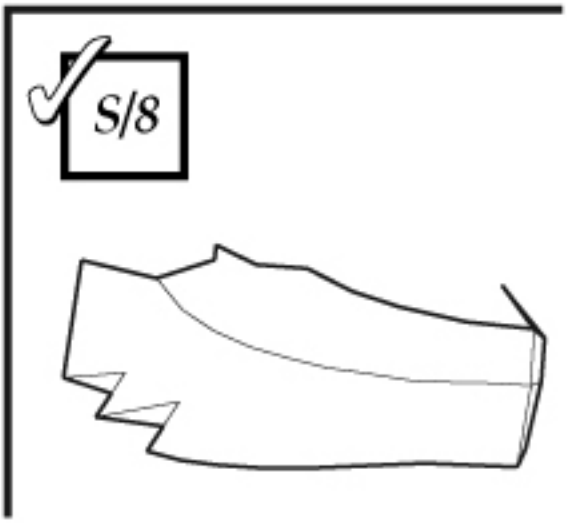

Mask Paper Engineering © Glen Coleman 2012

19

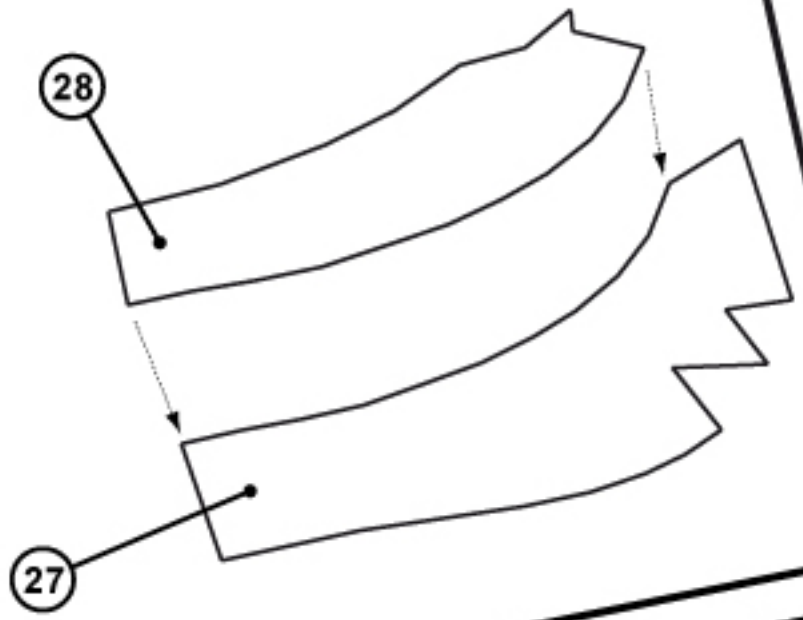

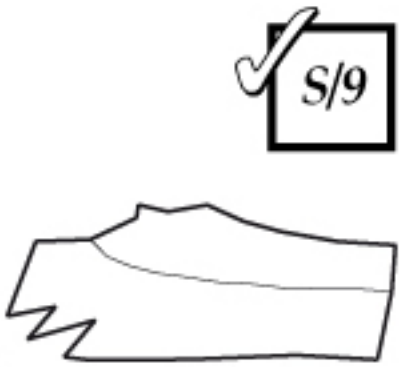

20

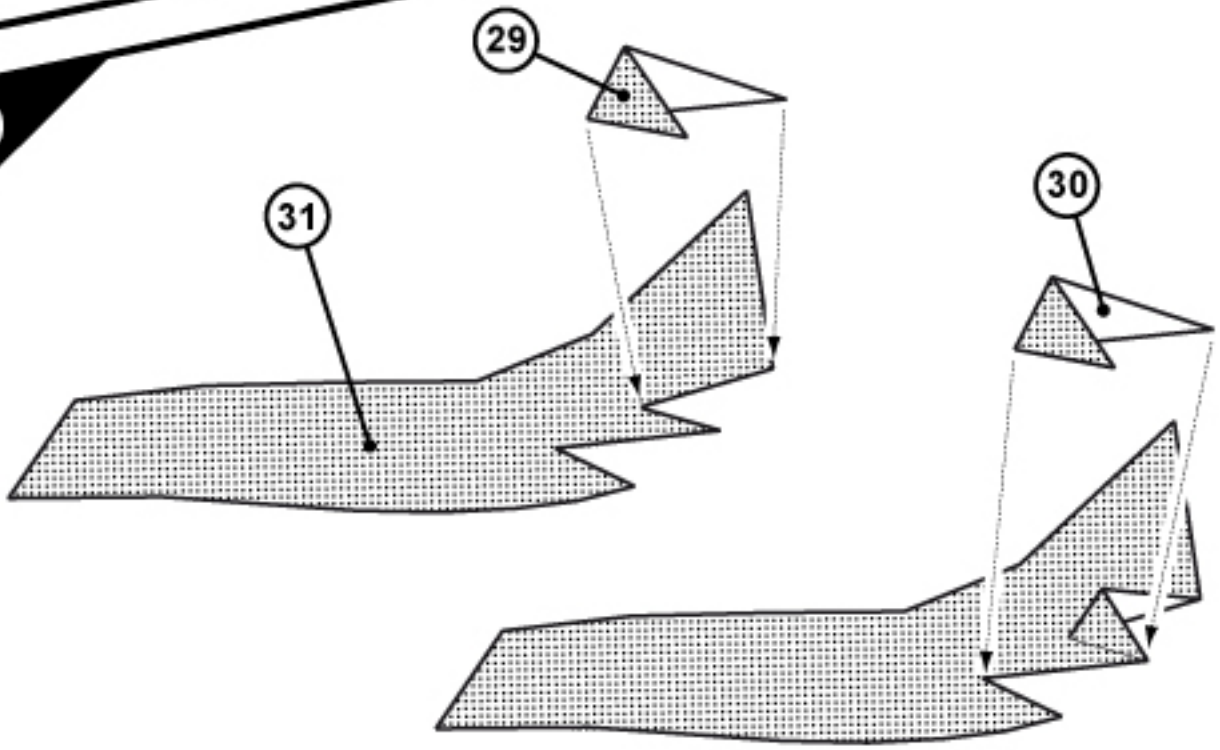

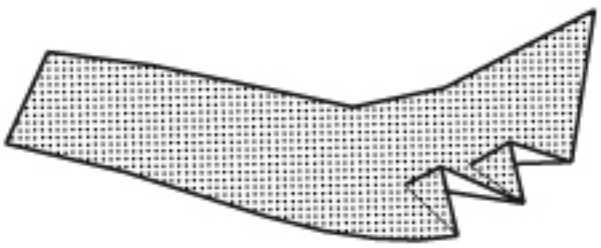

Assembly Instructions Artwork © Glen Coleman 2012

Mask Paper Engineering © Glen Coleman 2012

21

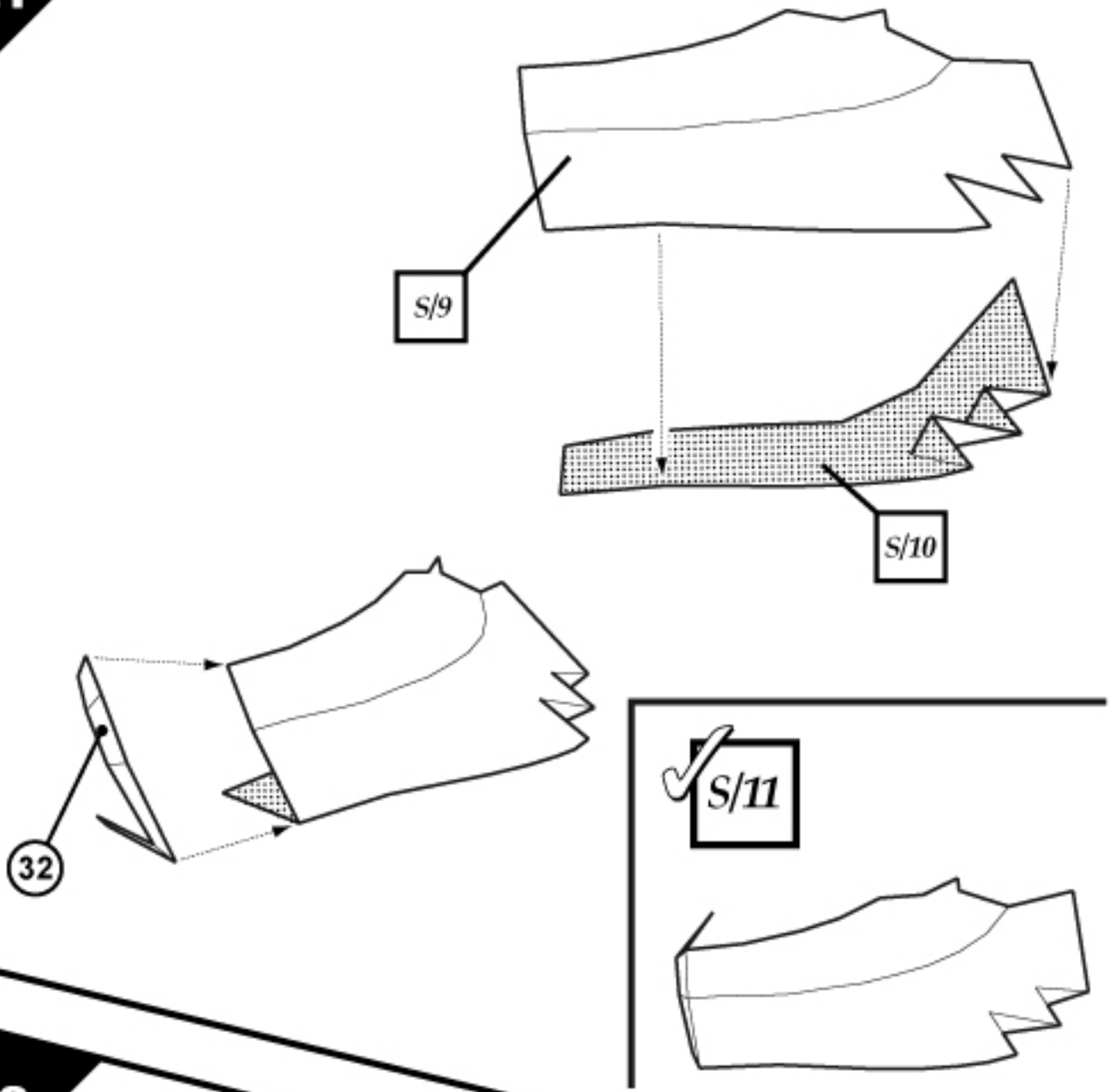

22

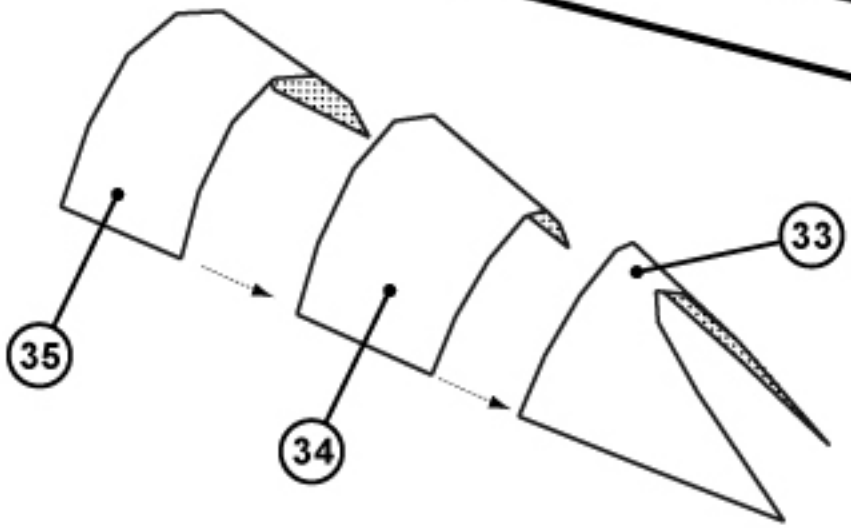

23

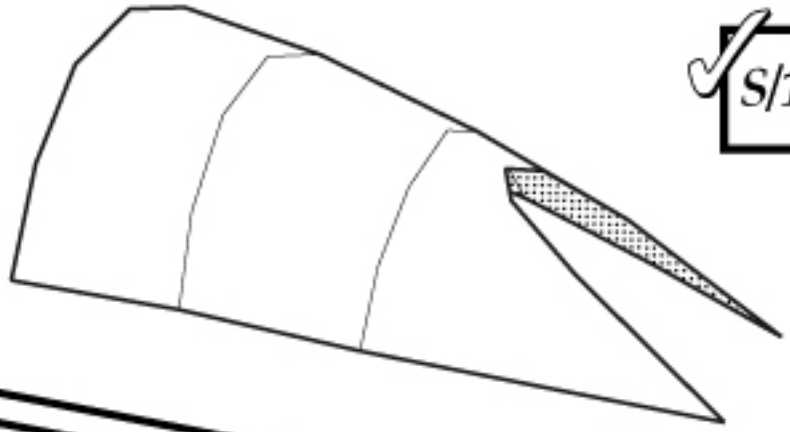

S/12

24

A

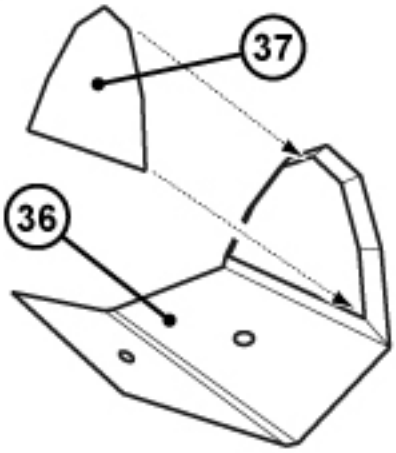

C

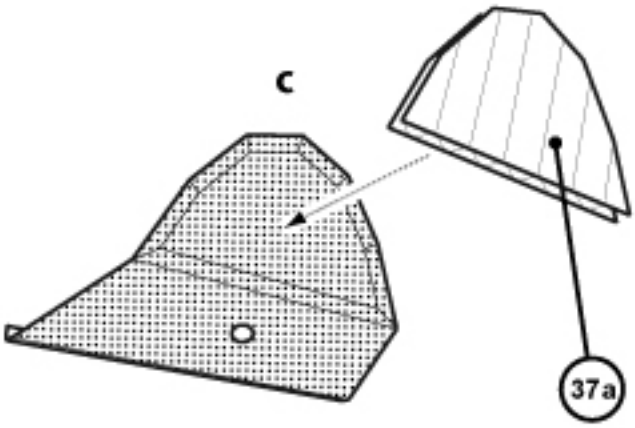

C

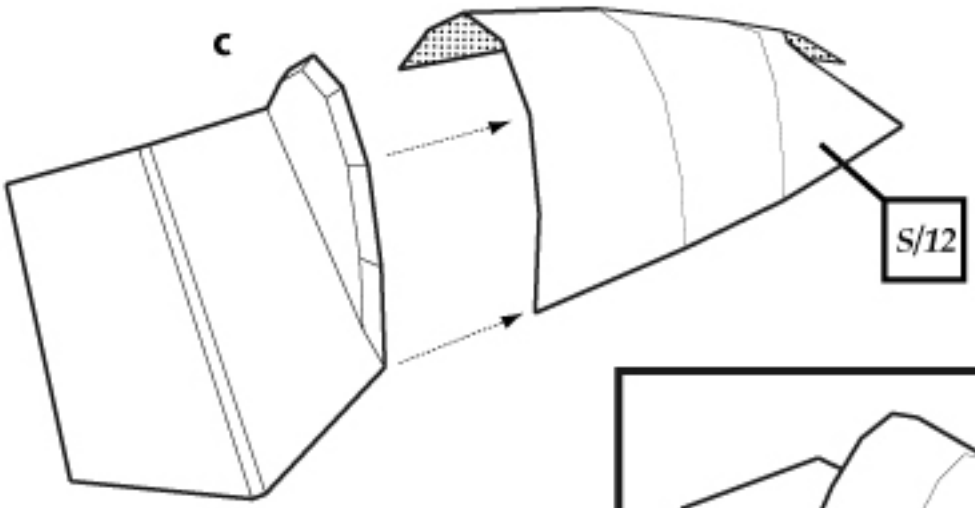

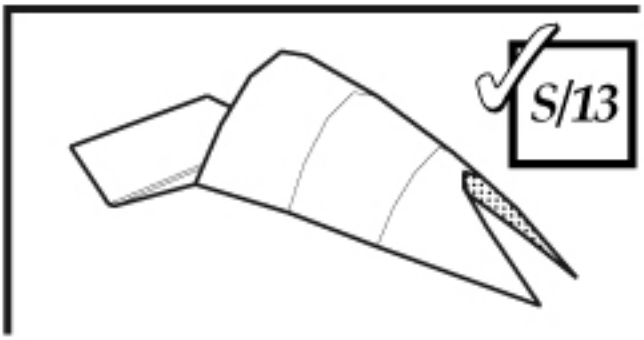

Mask Paper Engineering © Glen Coleman 2012

Assembly Instructions Artwork © Glen Coleman 2012

Mask Paper Engineering © Glen Coleman 2012

25

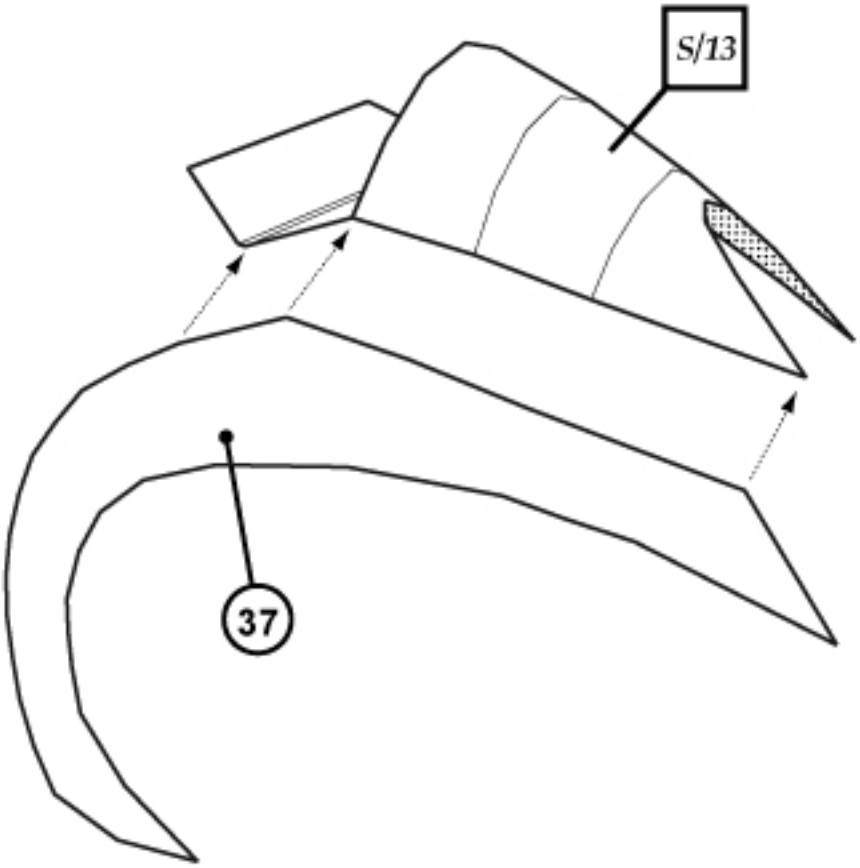

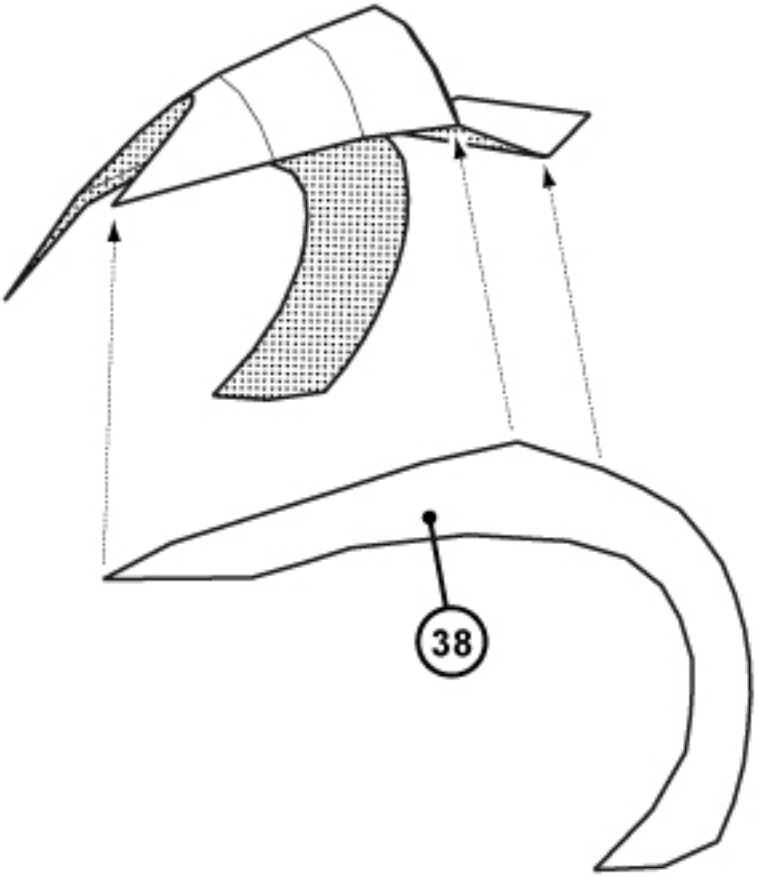

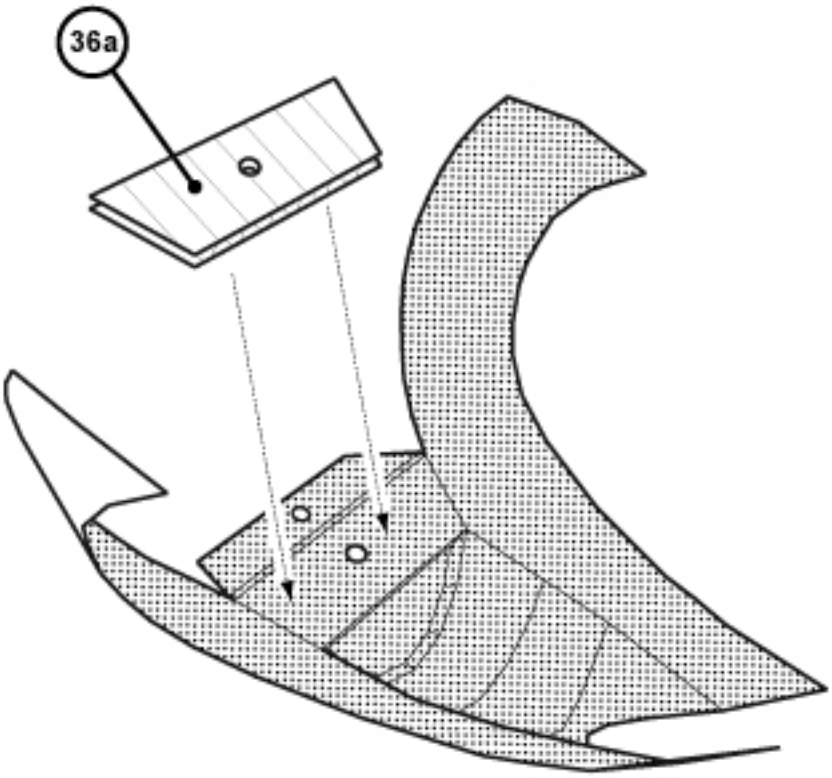

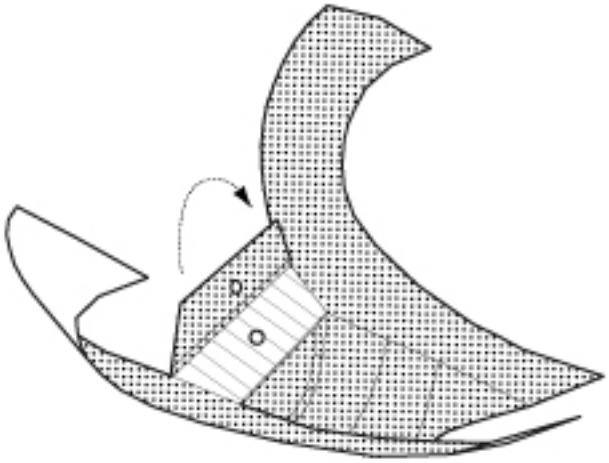

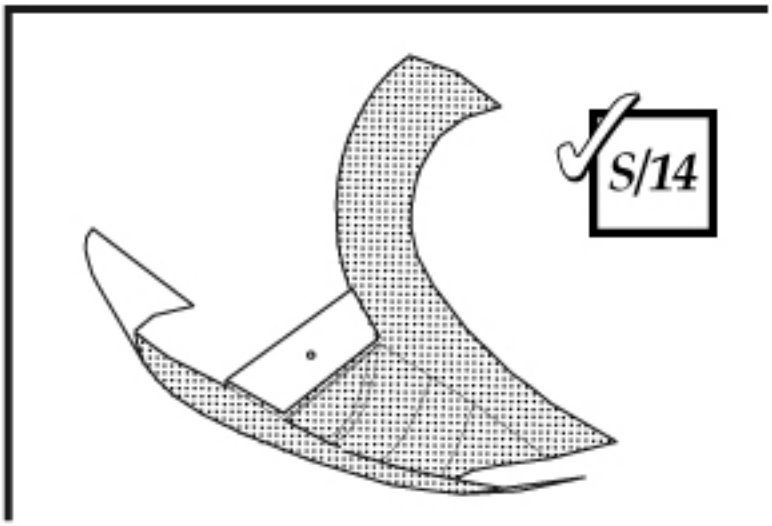

Nanik Paper Engineering © Glen Coleman 2012

Assembly Instructions Artwork © Glen Coleman 2010

Mask Paper Engineering © Glen Coleman 2012

27

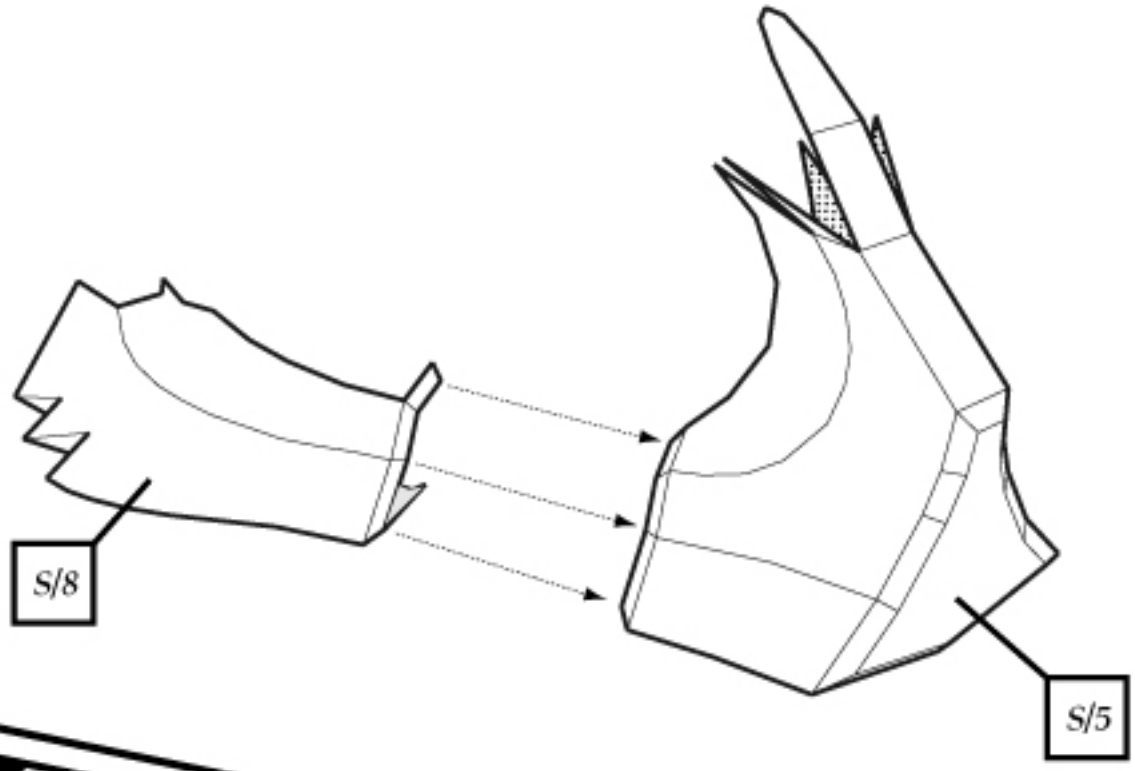

28

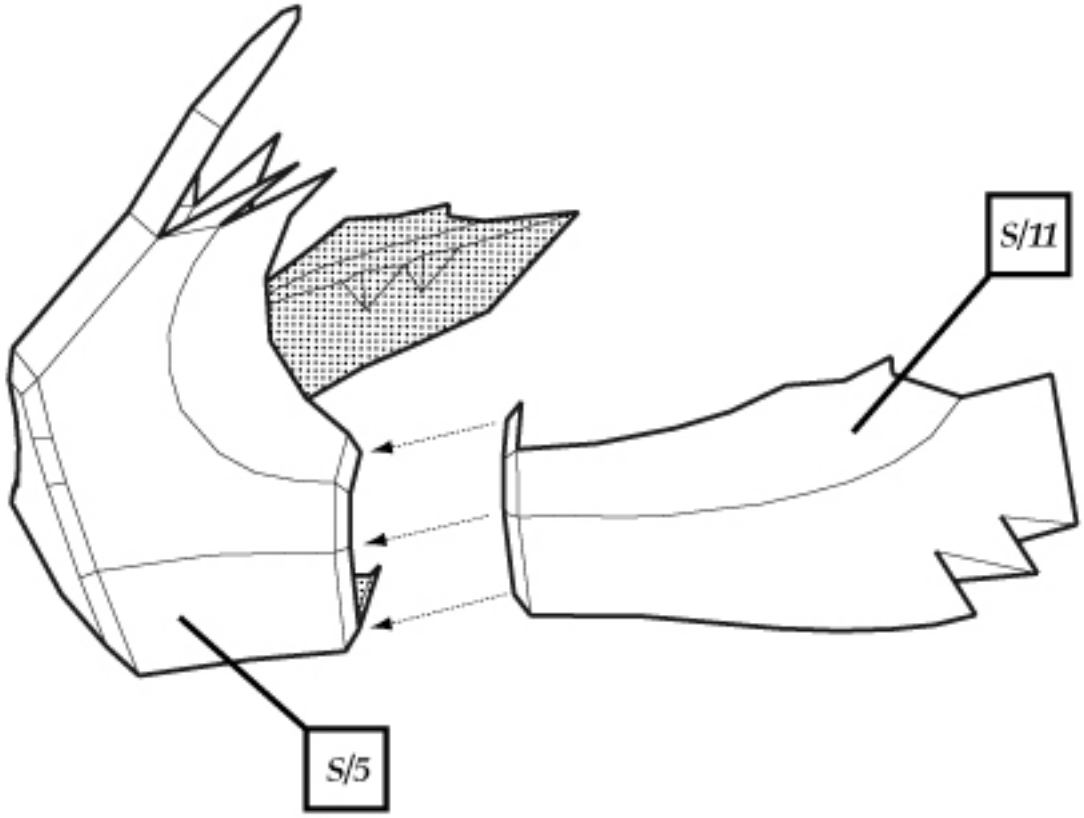

Mark Paper Engineering © Glen Coleman 2012

29

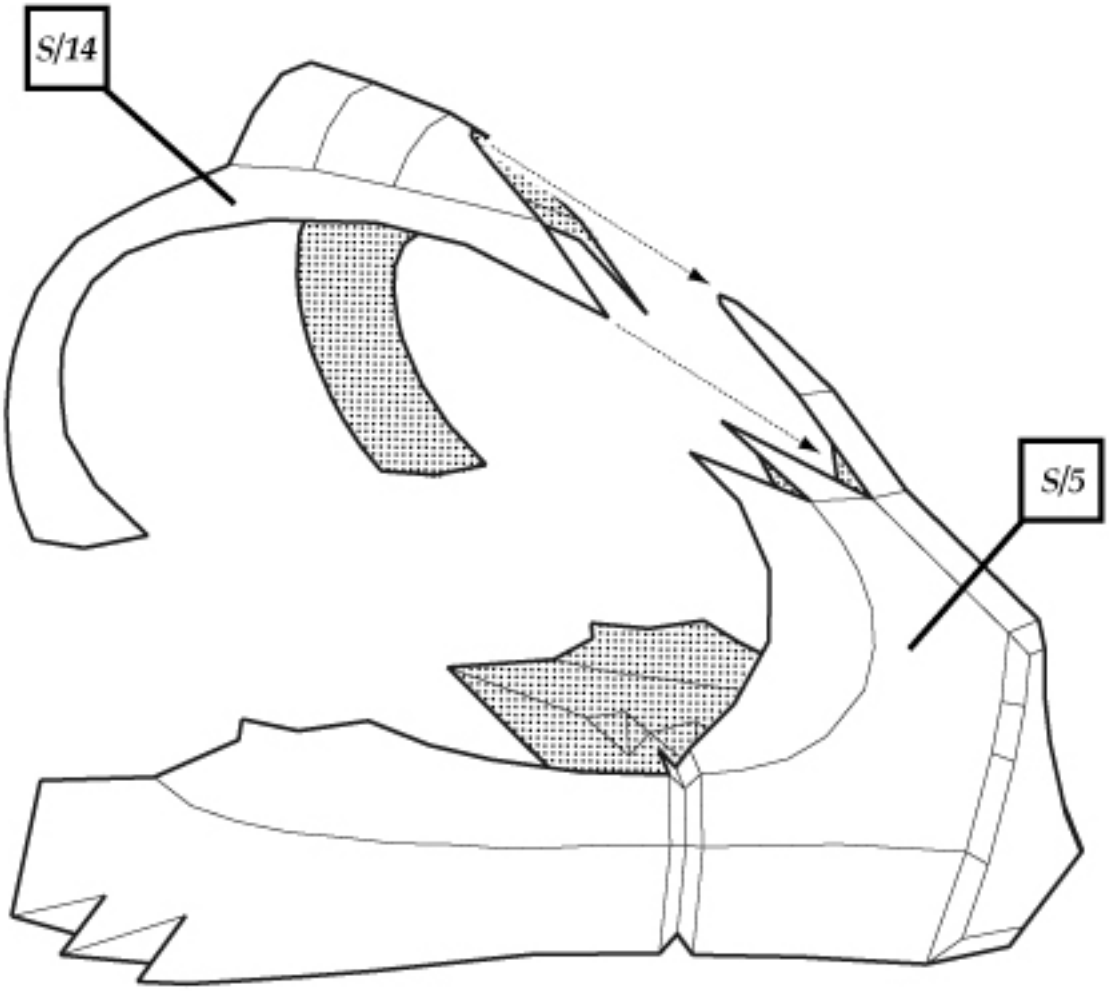

Also gluat this point and repeat on the opposite side

30

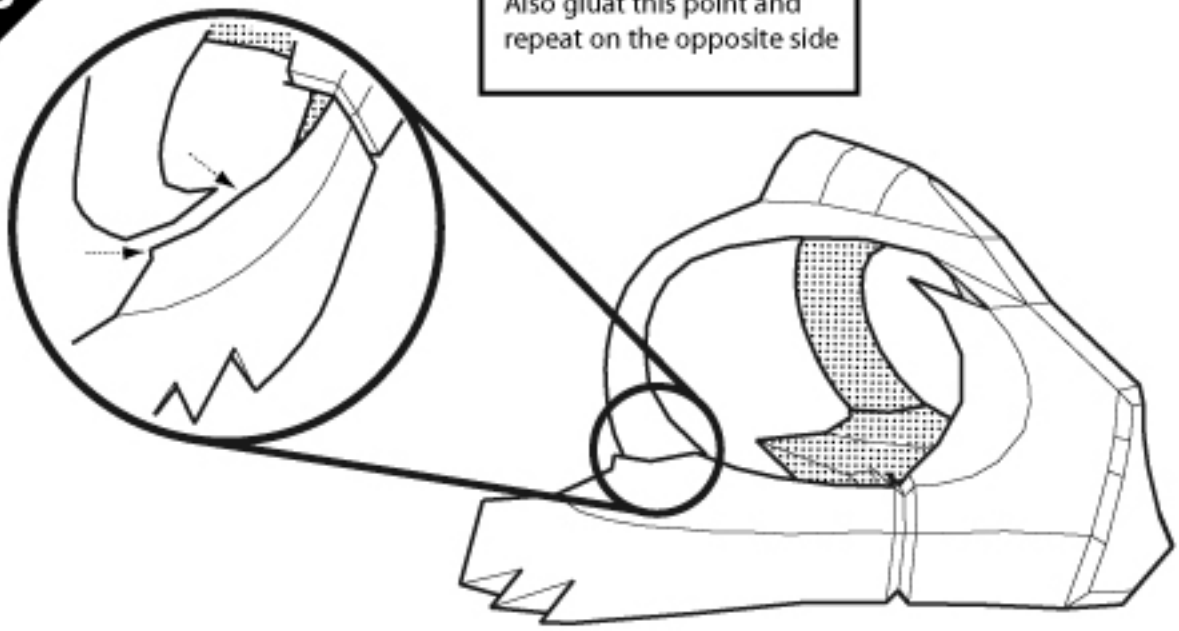

Assembly Instructions Artwork © Glen Coleman 2012

Mask Paper Engineering © Glen Coleman 2012

31

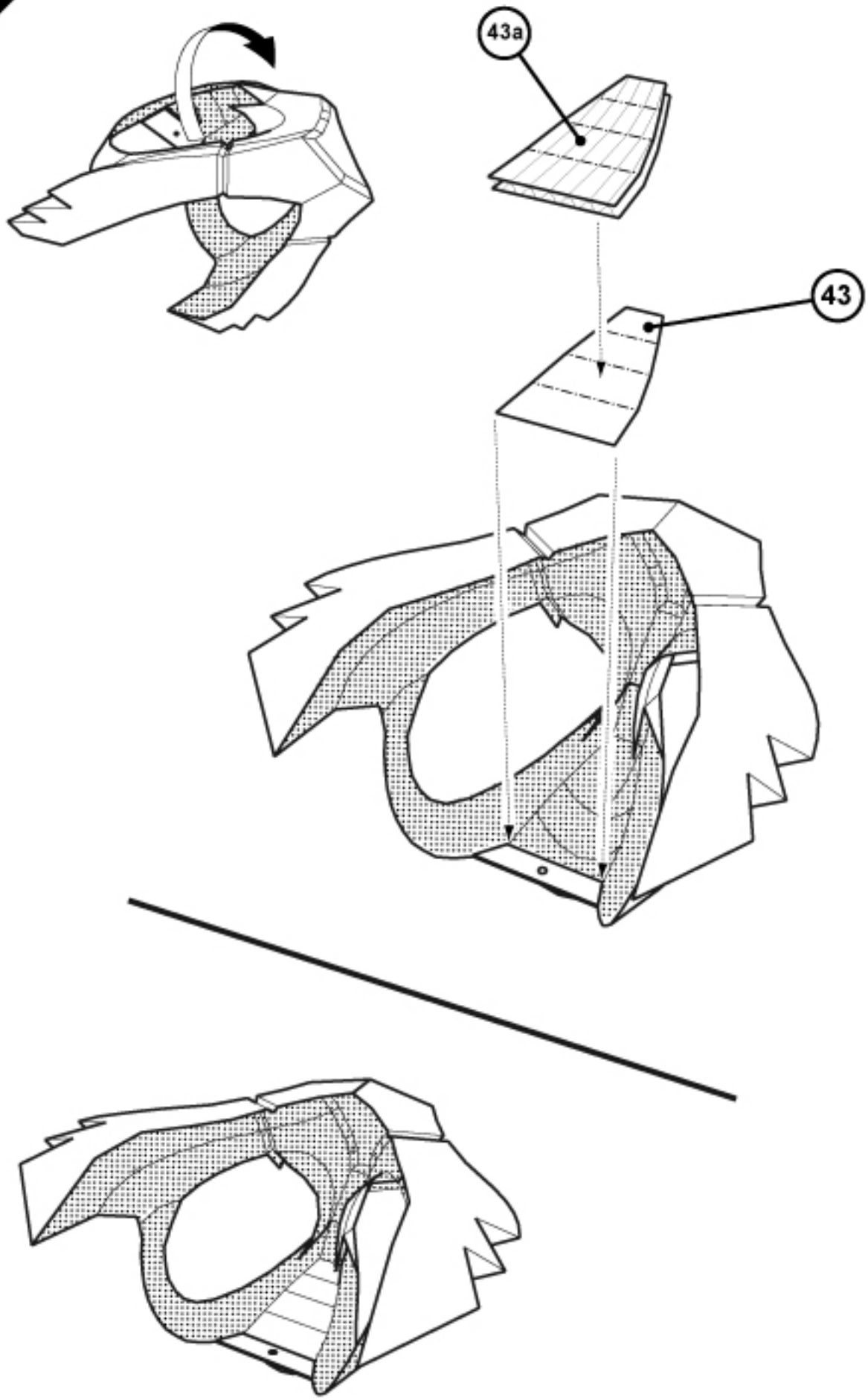

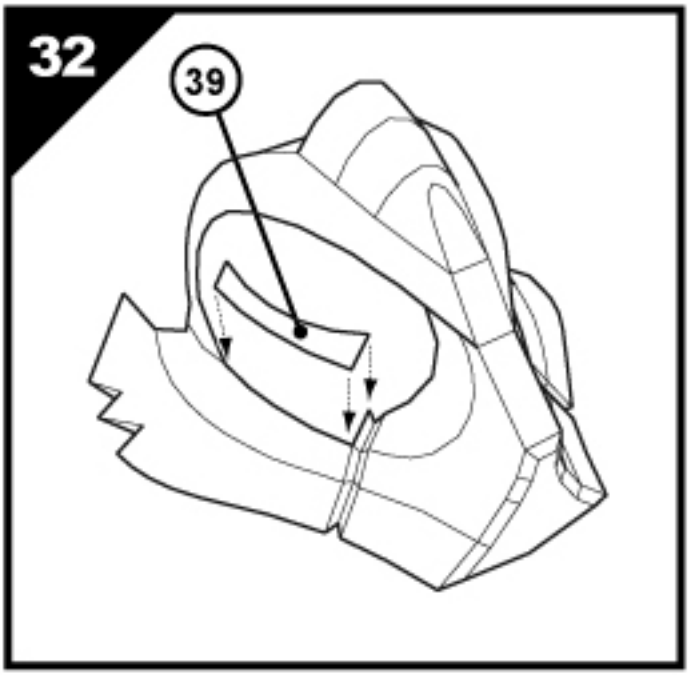

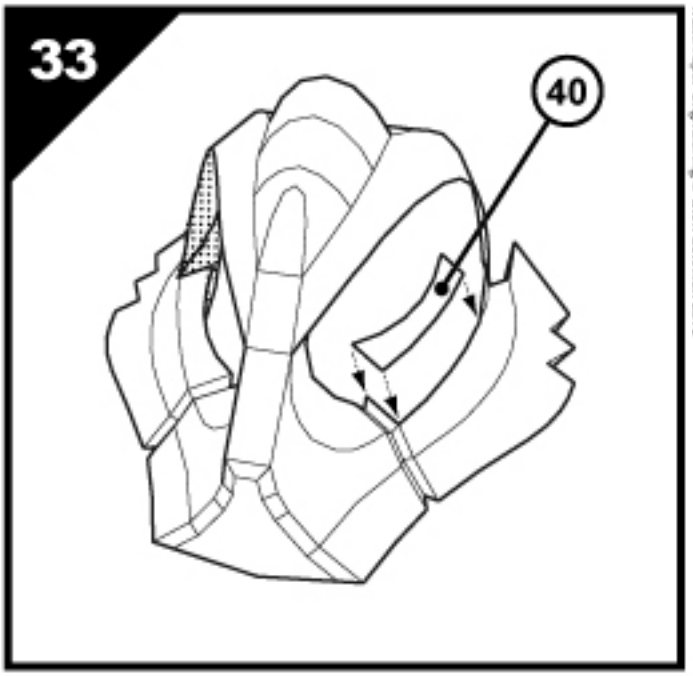

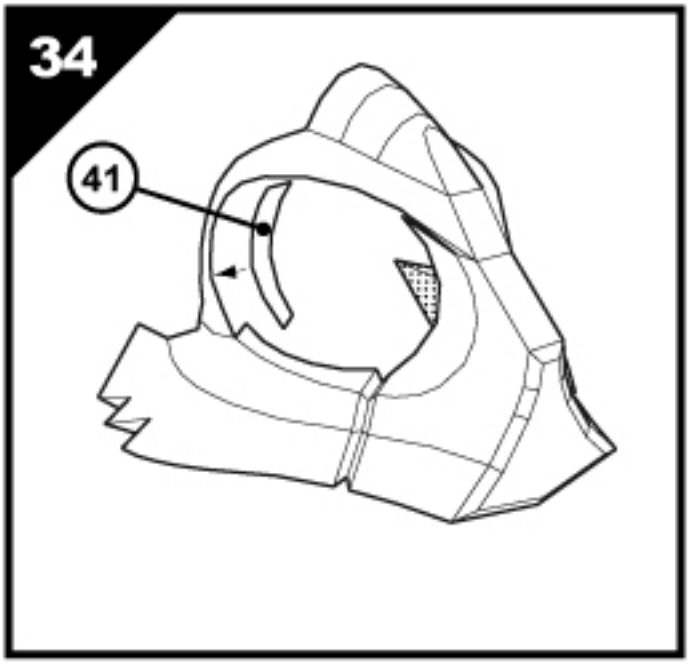

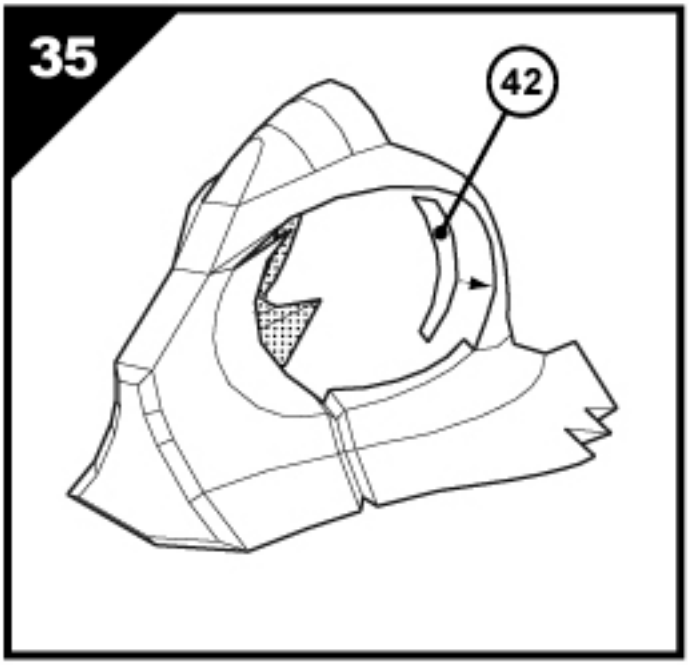

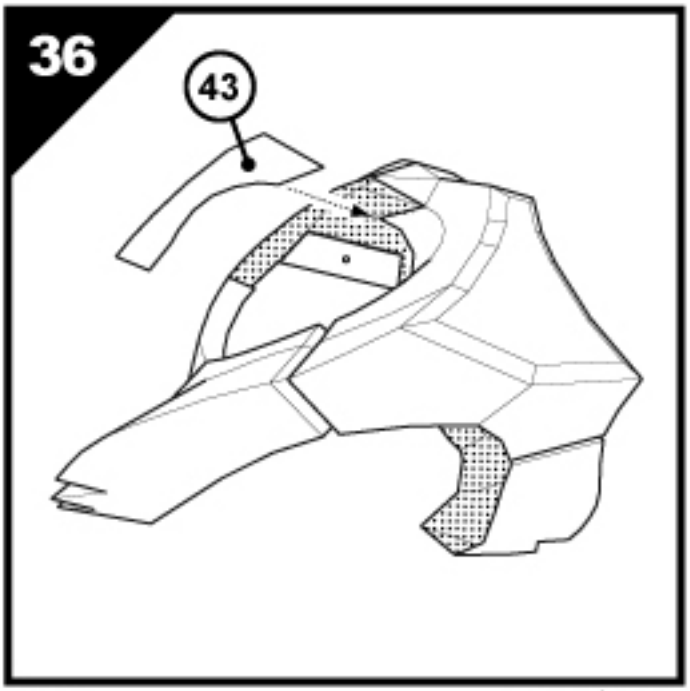

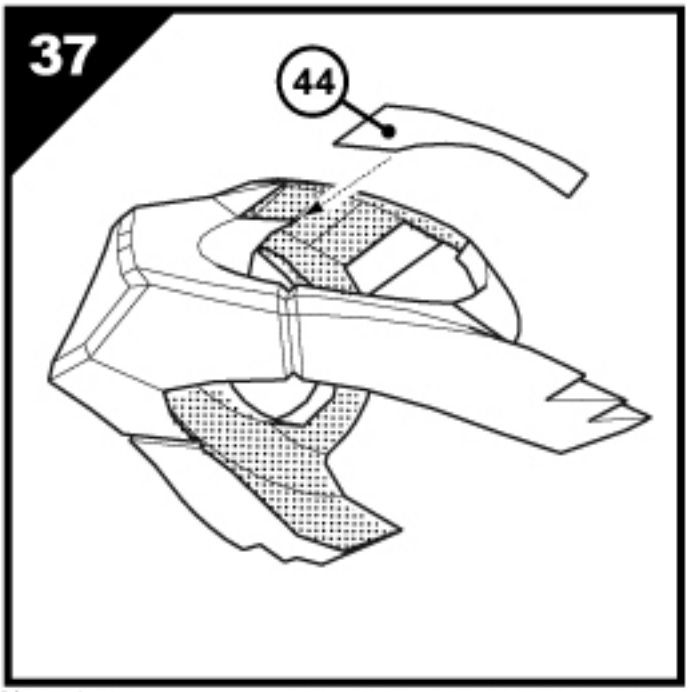

Mack Paper Engineering © Glen Coleman 2012

Assembly Instructions Artwork © Glen Coleman 2012

Nasa Paper Engineering © Glen Coleman 2012

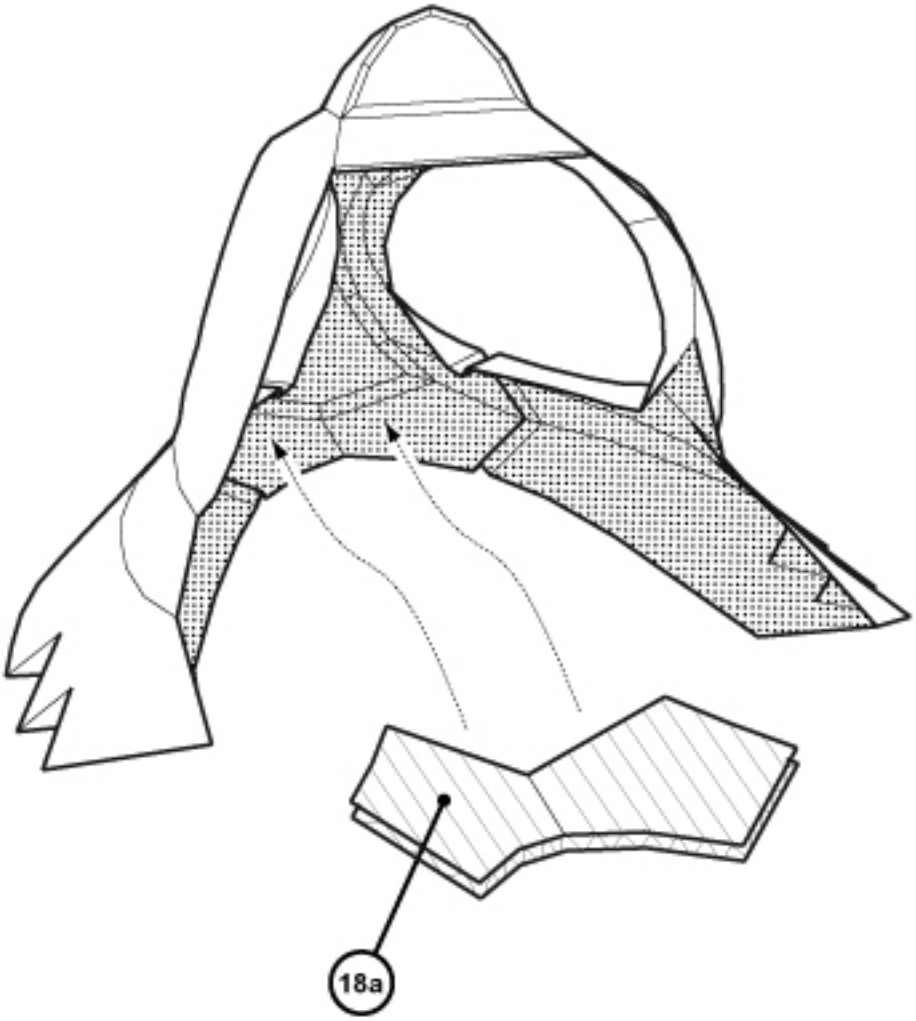

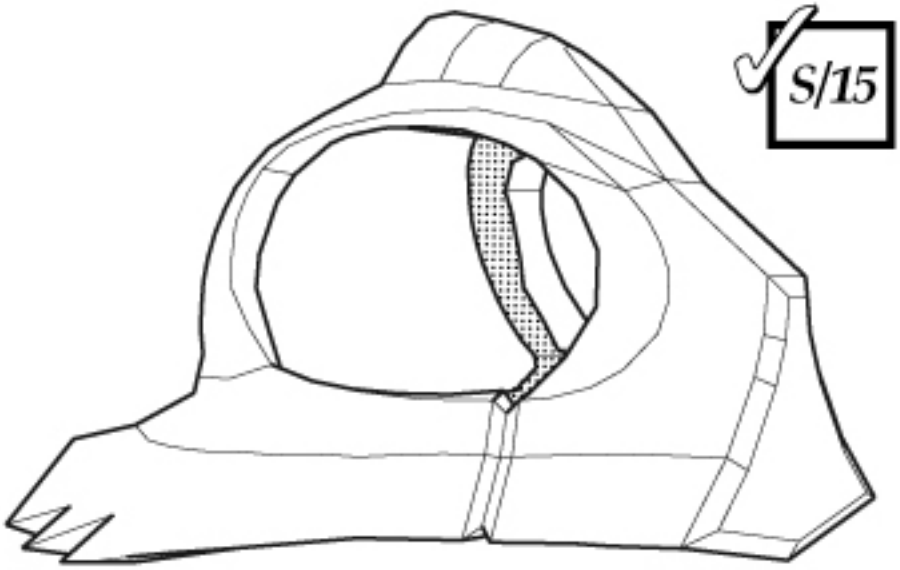

Mask Paper Engineering © Glen Coleman 2012

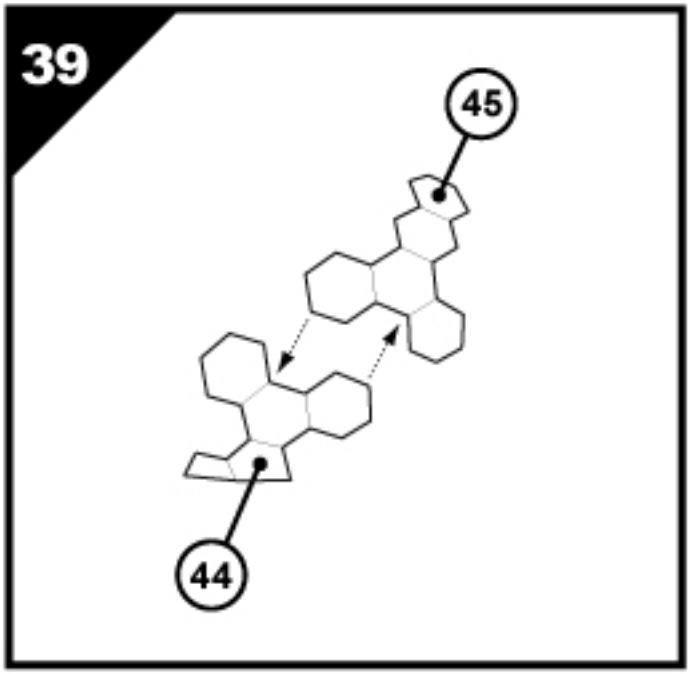

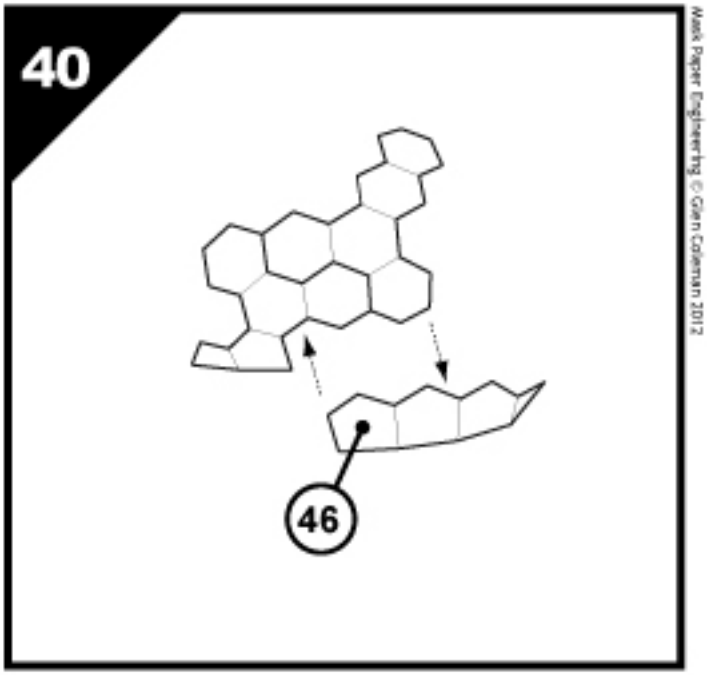

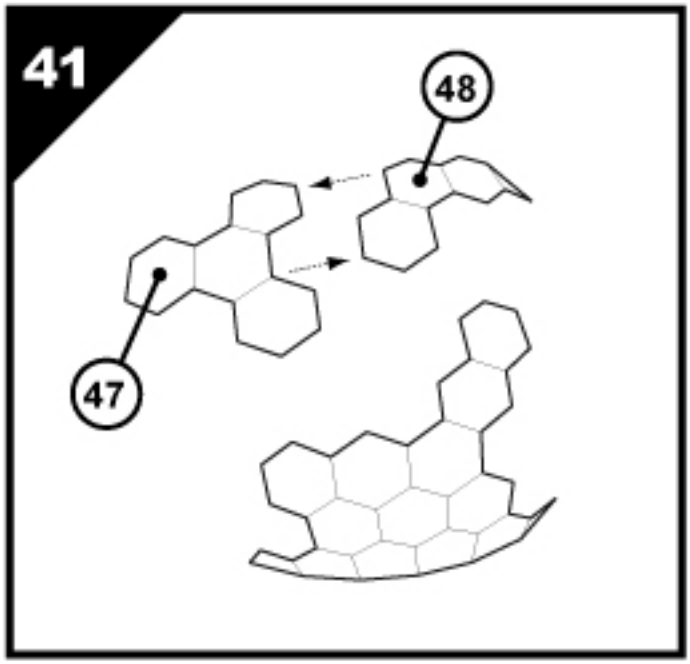

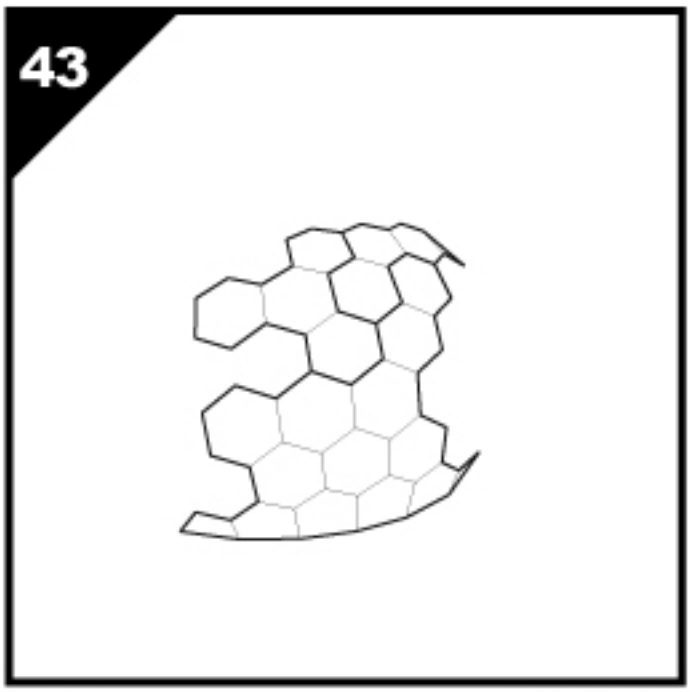

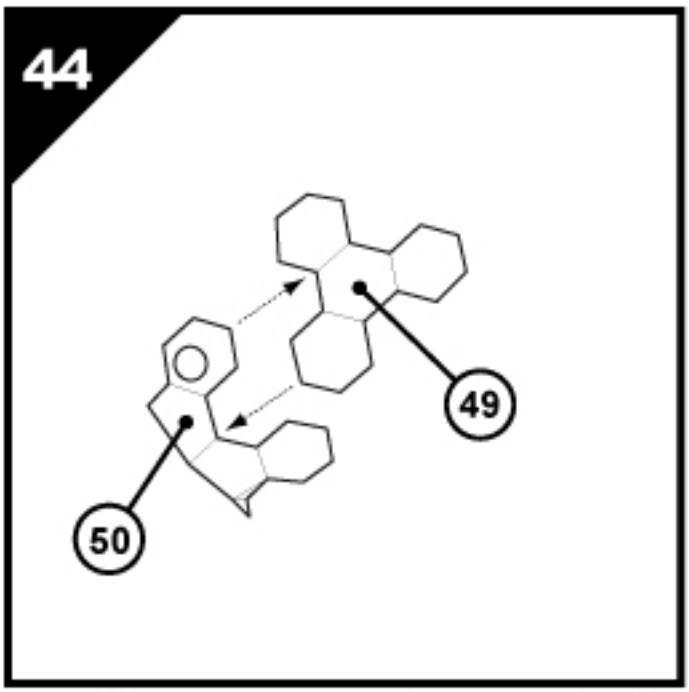

Assembly Instructions Artwork © Glen Coleman 2012

Mask Paper Engineering © Glen Coleman 2012

45

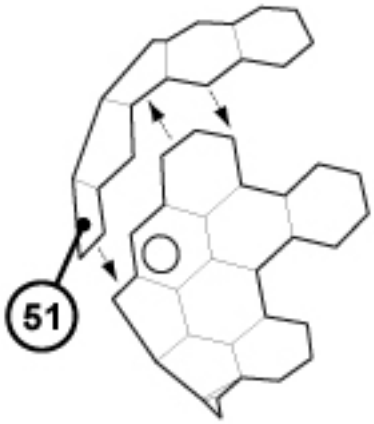

46

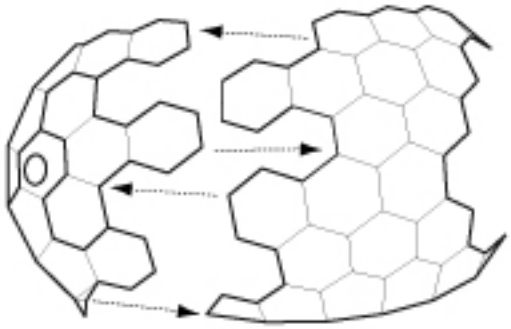

47

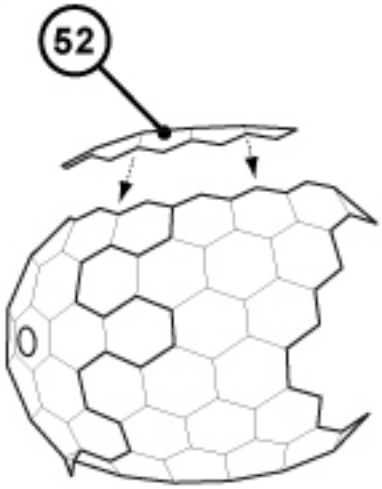

48

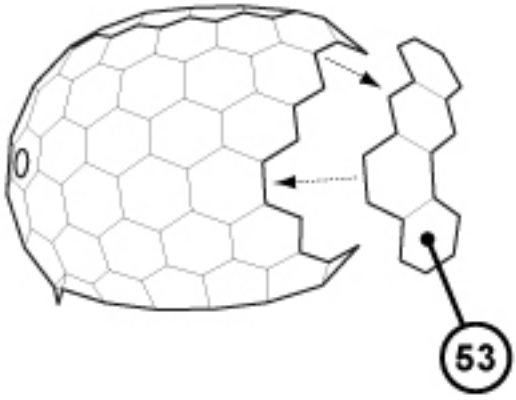

49

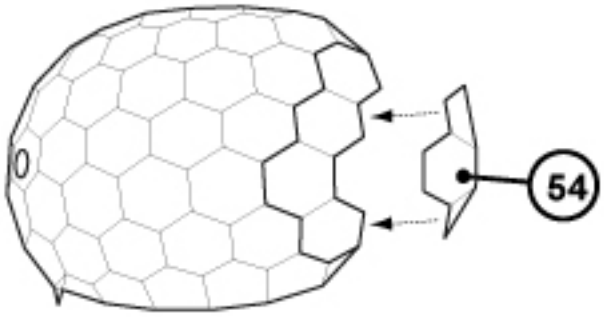

50

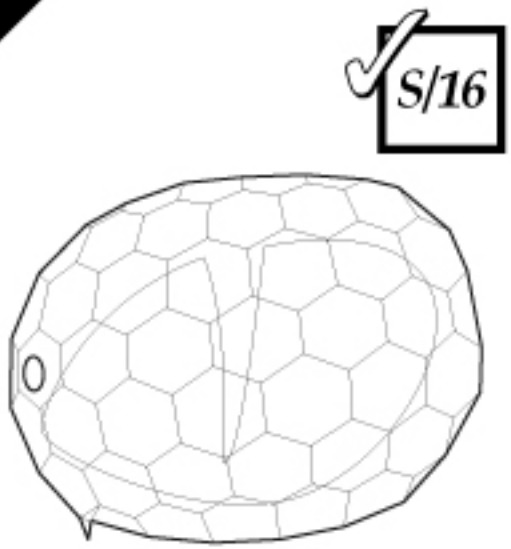

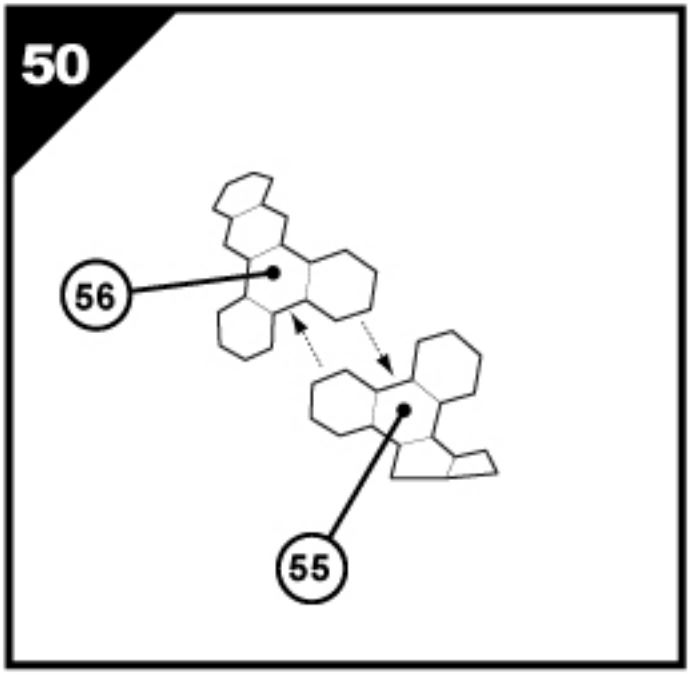

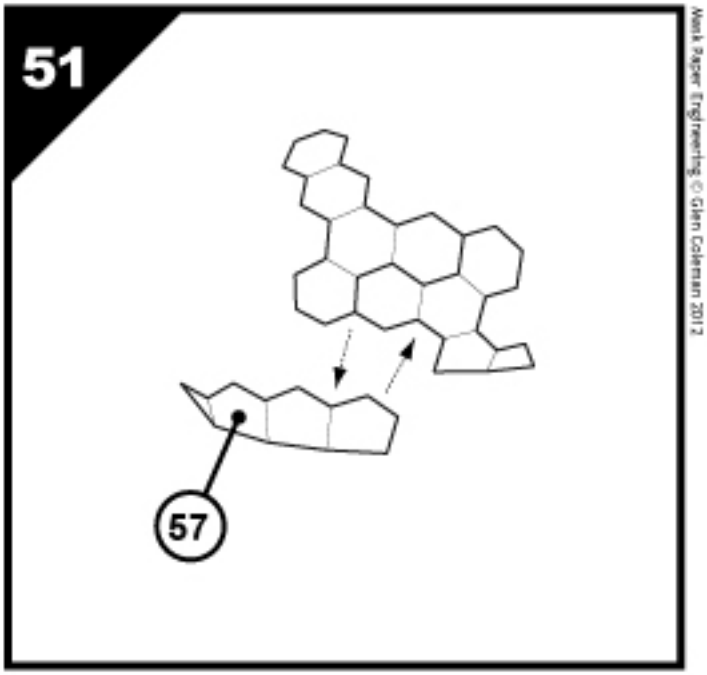

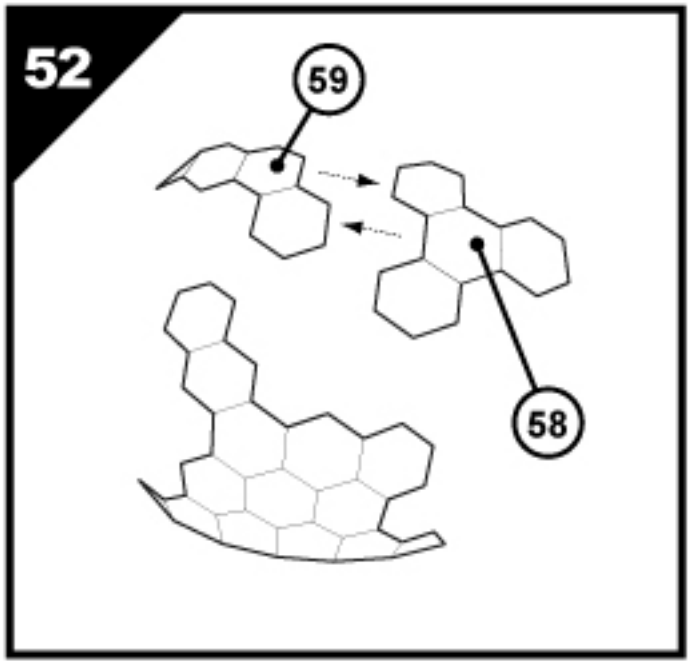

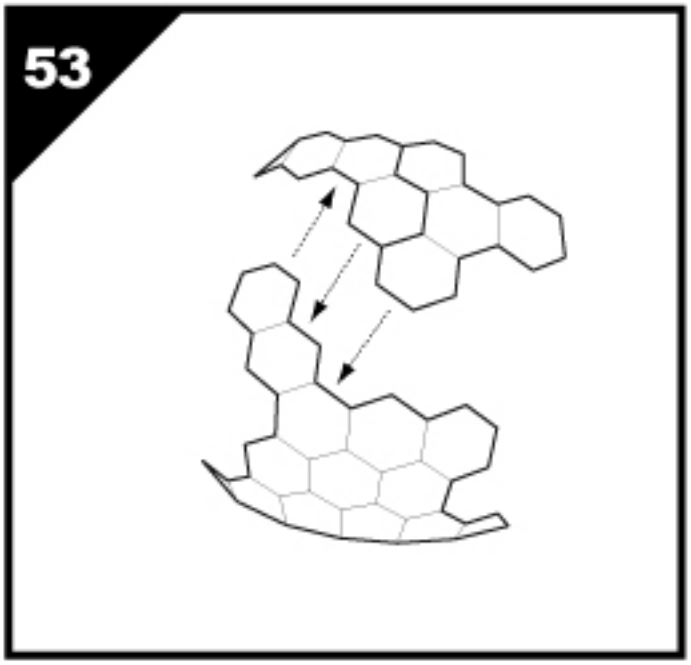

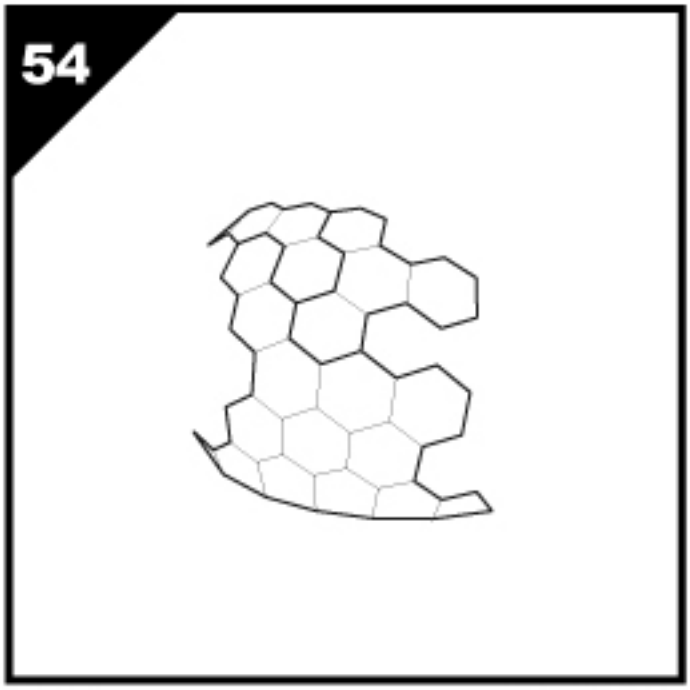

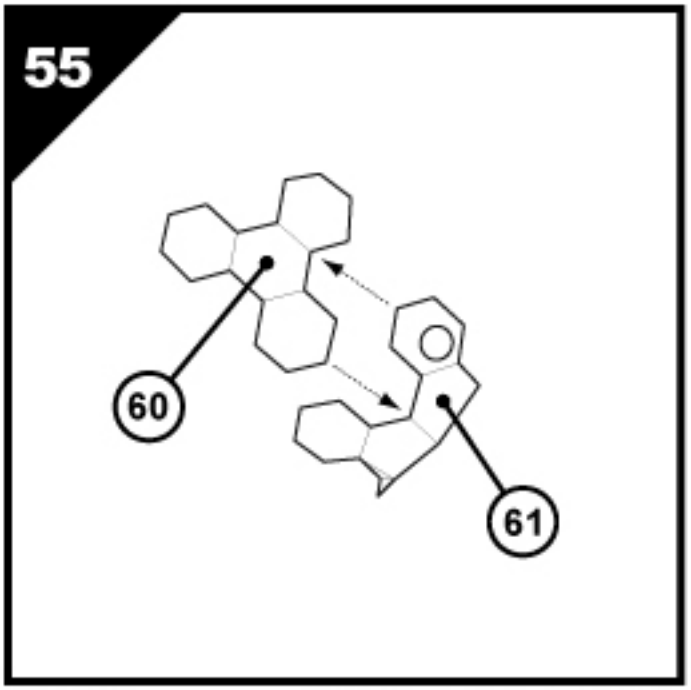

Mark Paper Engineering © Glen Coleman 2012

Assembly Instructions Artwork © Glen Coleman 2012

Mask Paper Engineering © Glen Coleman 2012

56

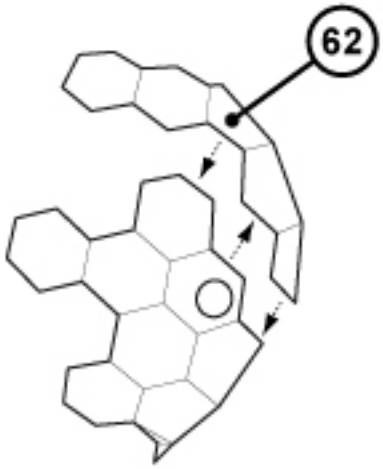

57

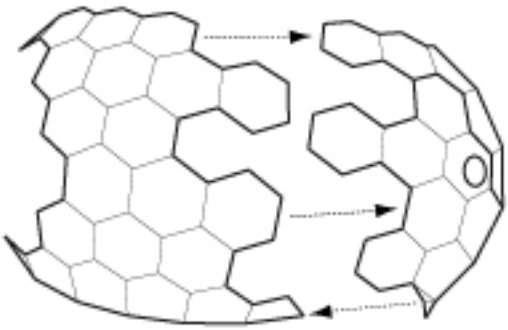

58

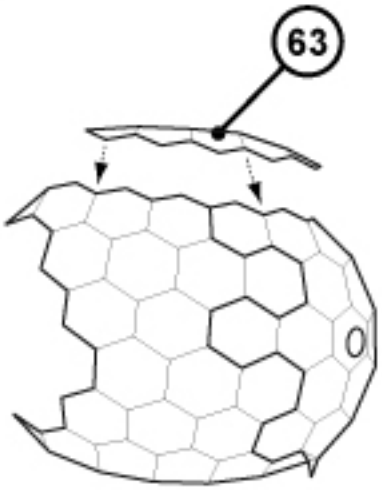

59

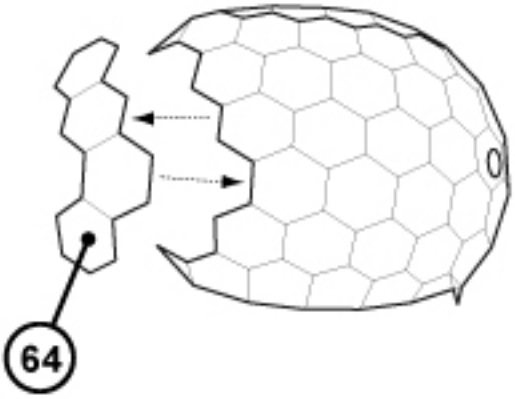

60

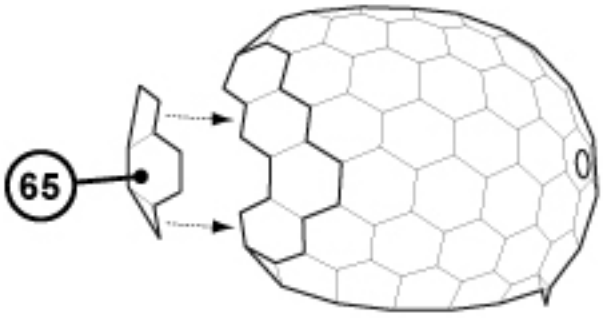

61

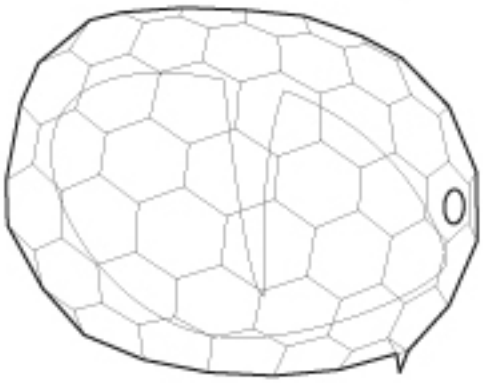

Mark Wagner Engineering © Glen Coleman 2012

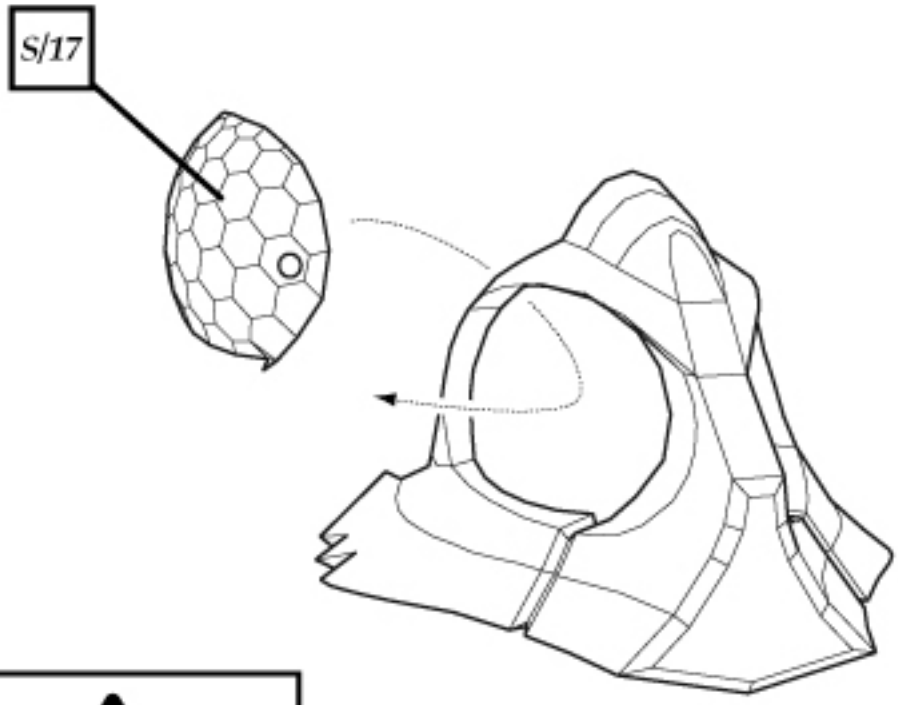

Attach eye from the inside of the mask. Fold glue tabs onto the underside of the eye socket.

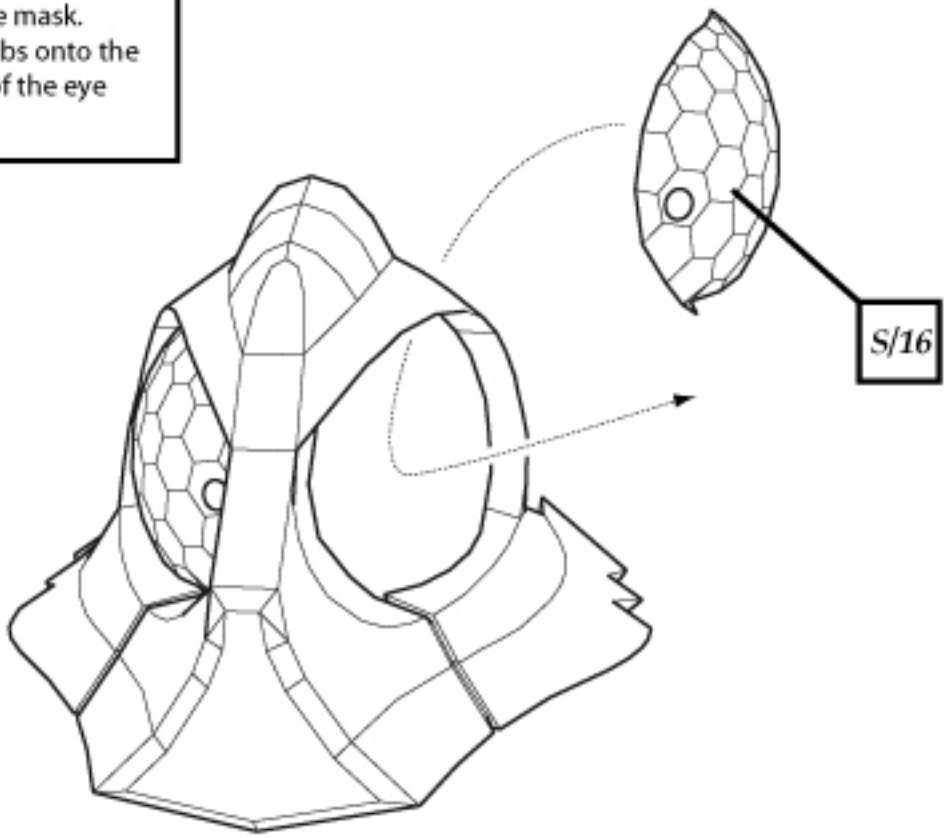

Assembly Instructions Artwork © Glen Coleman 2012

Mask Paper Engineering © Glen Coleman 2012

63

A

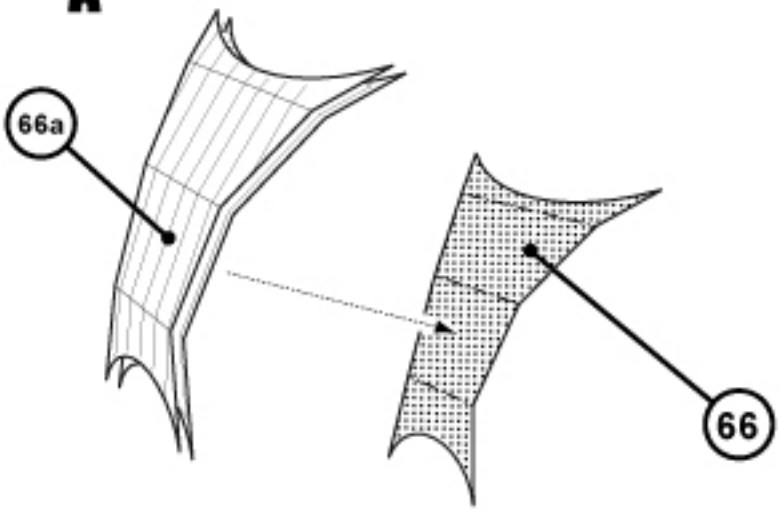

B

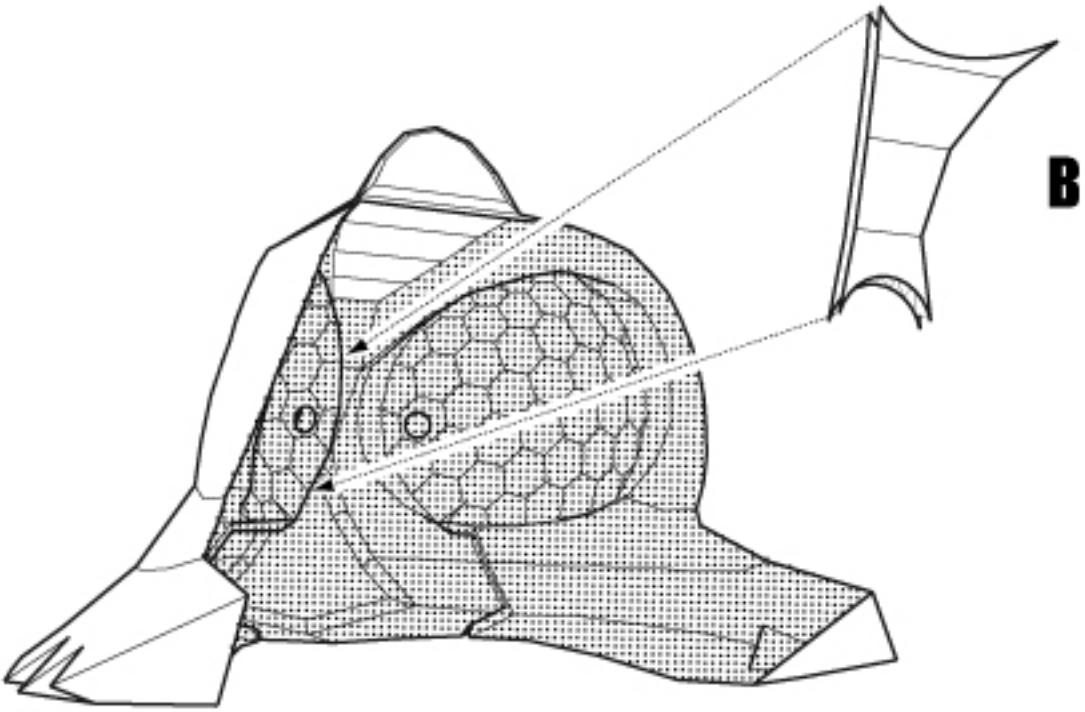

Align this part between the eyes at indiated and Glue tabs to the inside of each eye component

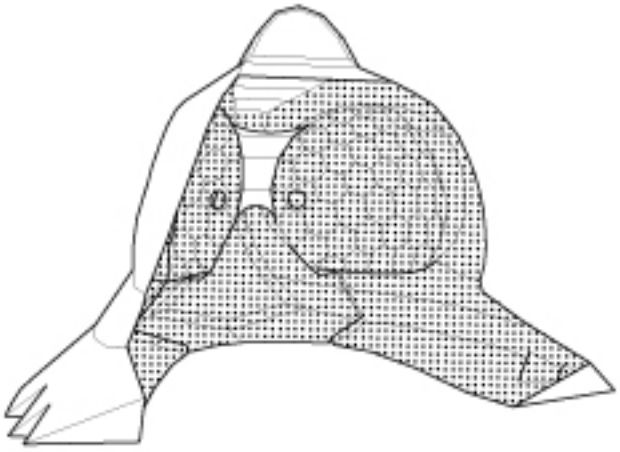

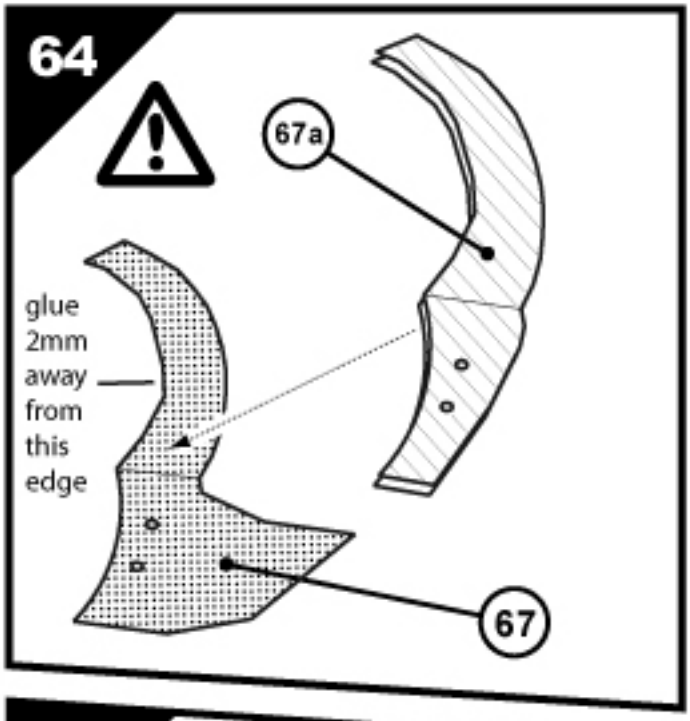

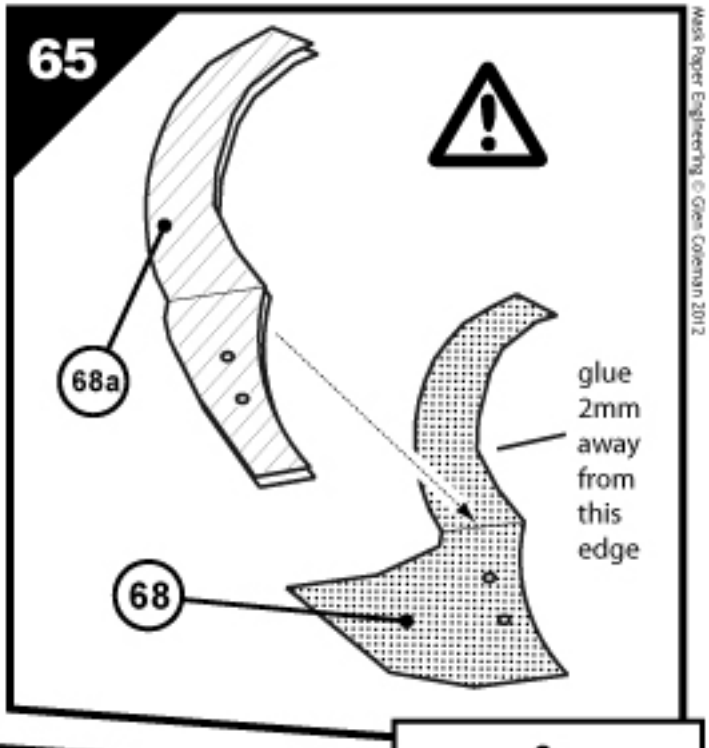

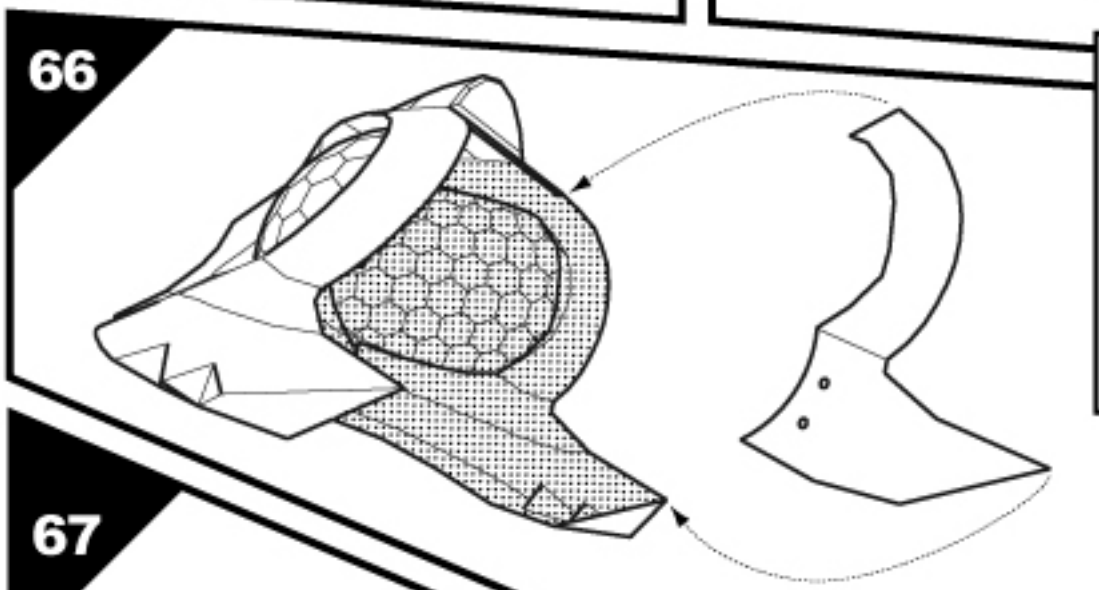

Cardboard is slightly smaller that the part. Glue to the underside of each part where indicated.

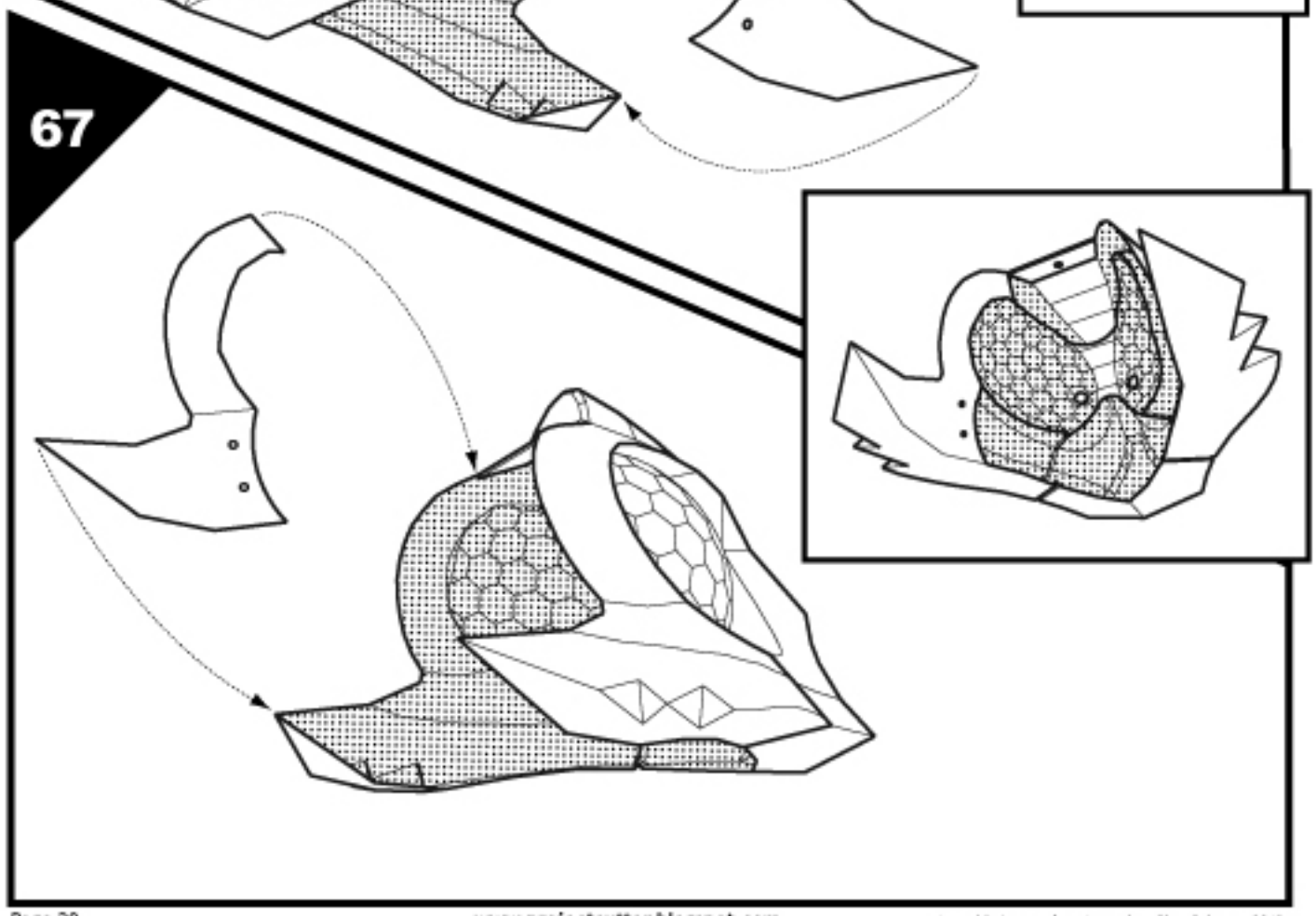

Mask Paper Engineering © Glen Coleman 2012

Assembly Instructions Artwork © Glen Coleman 2012

Mask Paper Engineering © Glen Coleman 2012

68

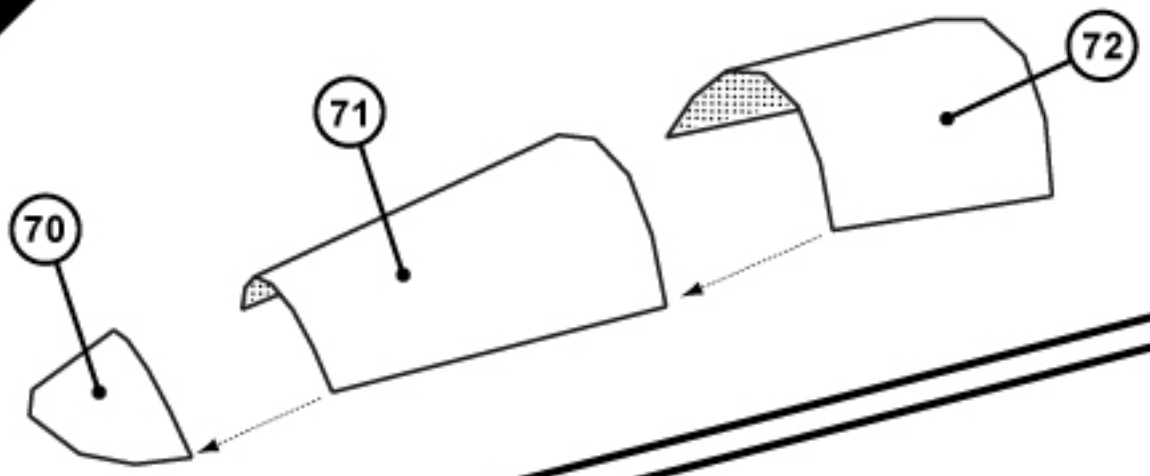

69

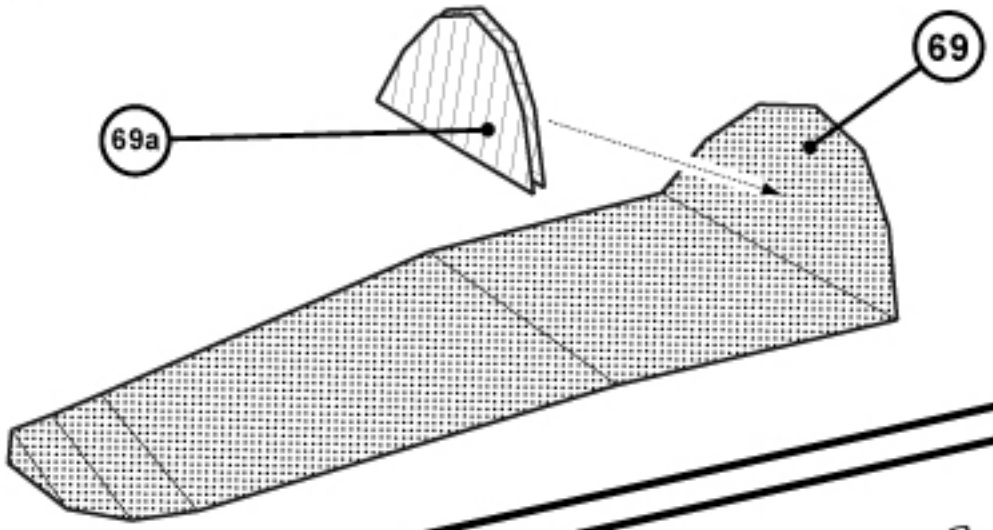

70

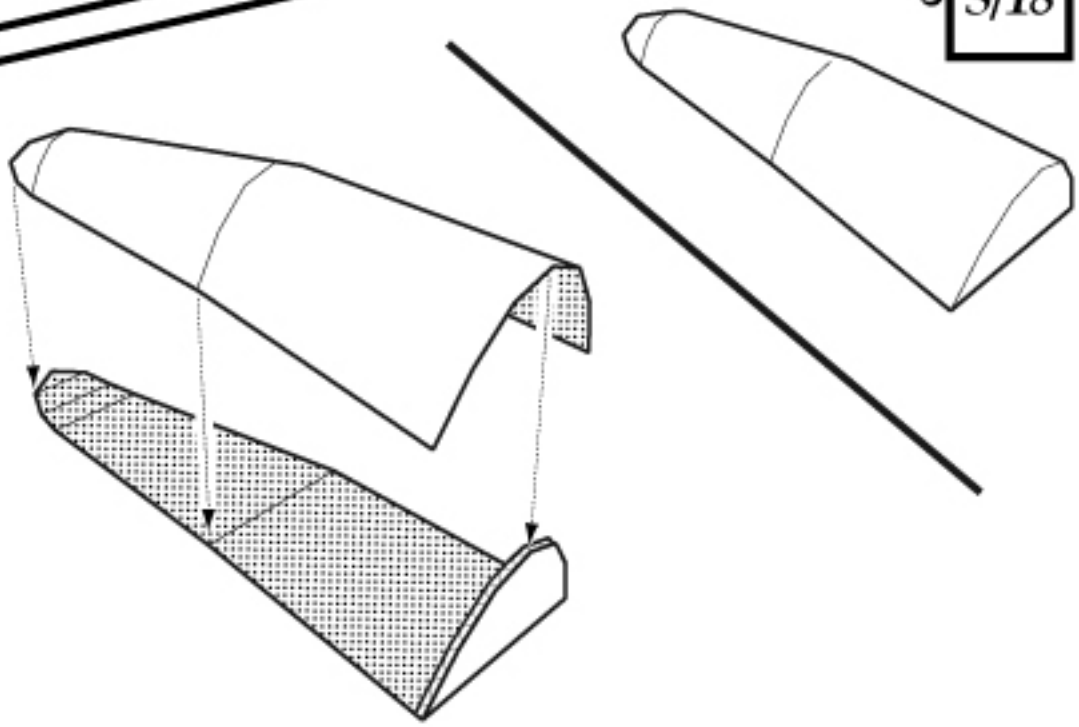

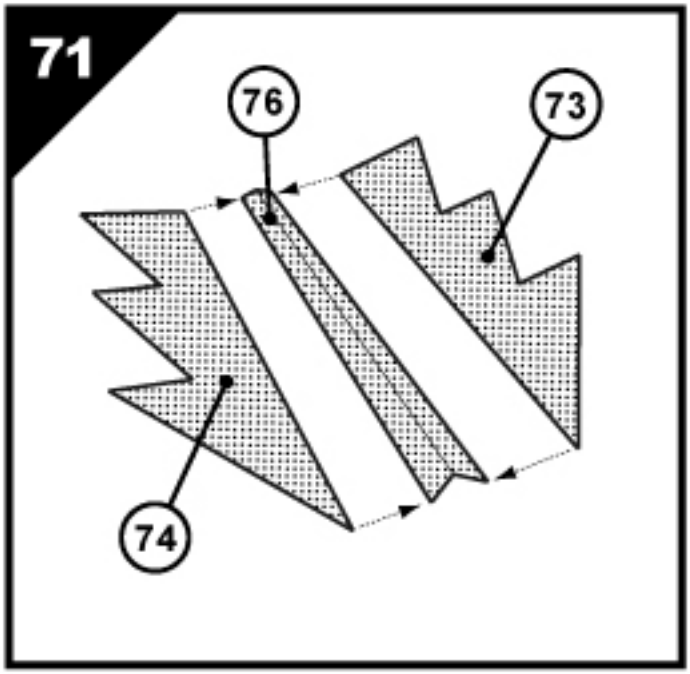

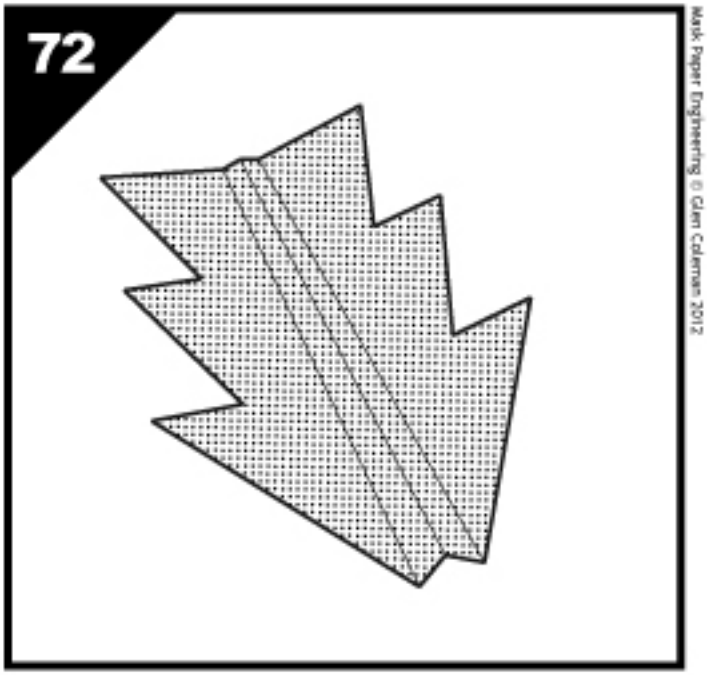

Mask Paper Engineering © Glen Coleman 2012

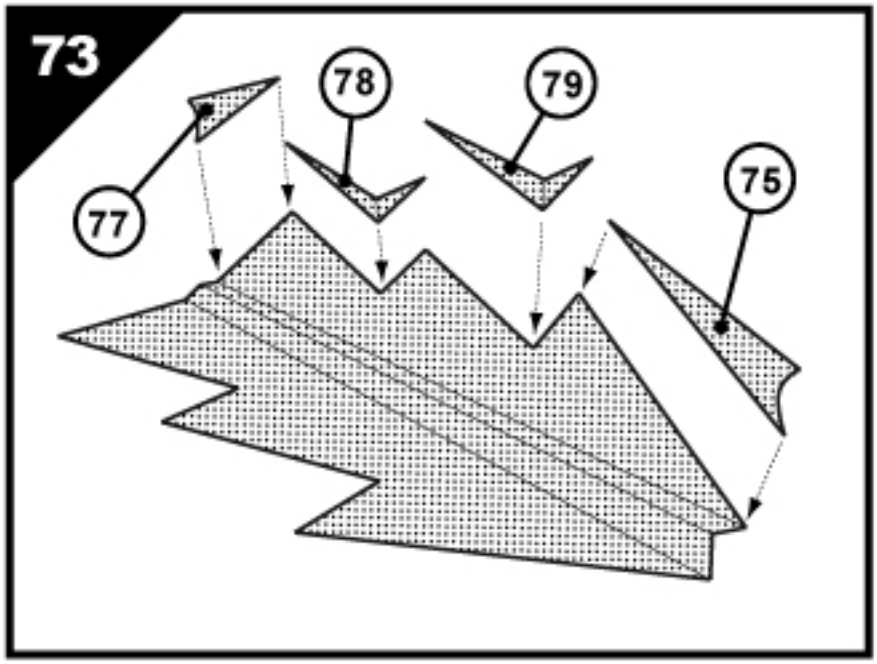

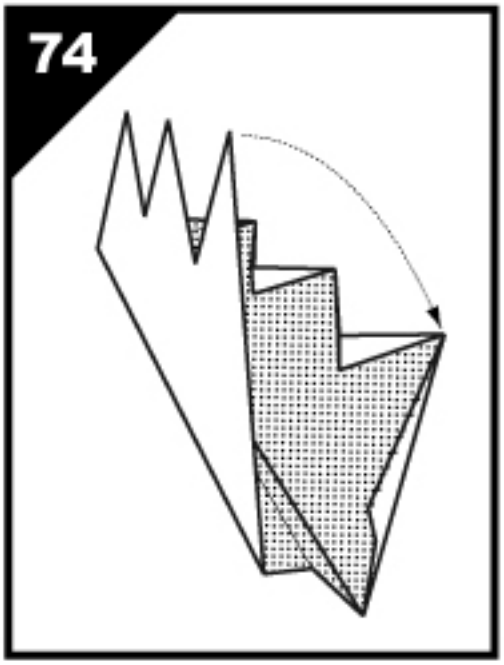

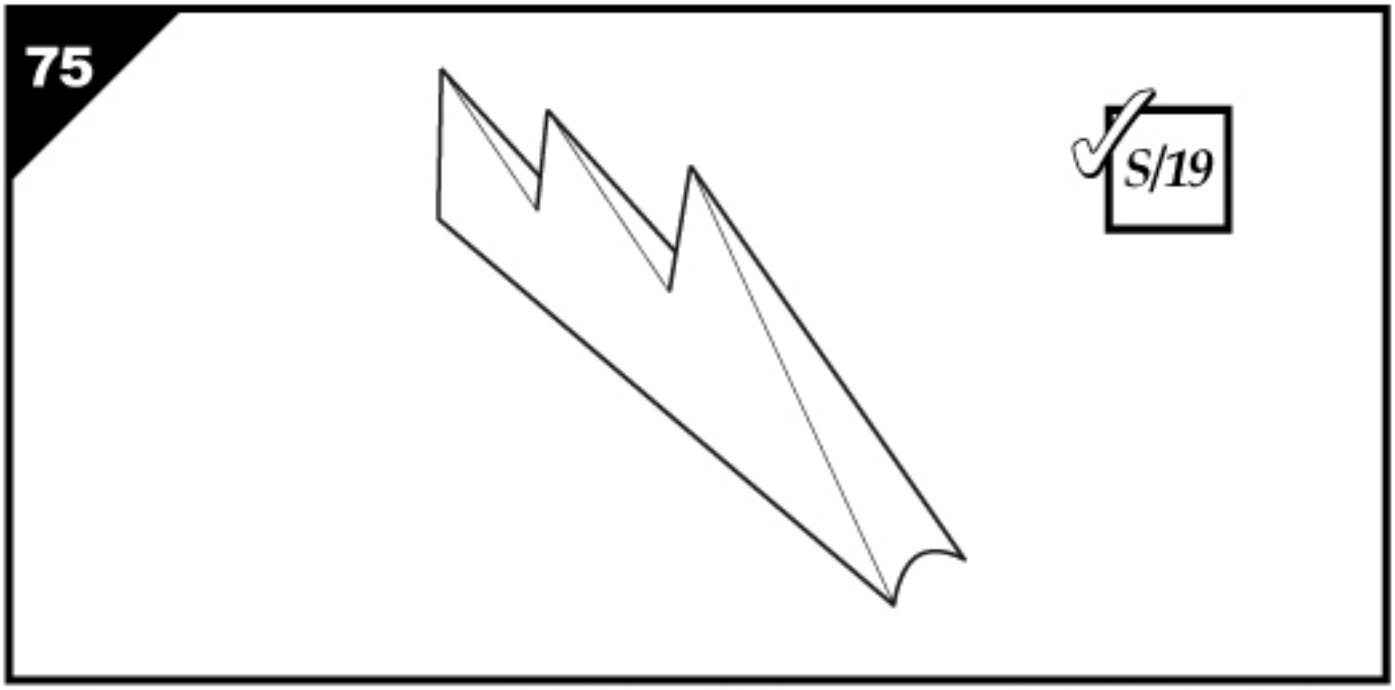

Assembly Instructions Artwork © Glen Coleman 2012

Mask Paper Engineering © Glen Coleman 2012

76

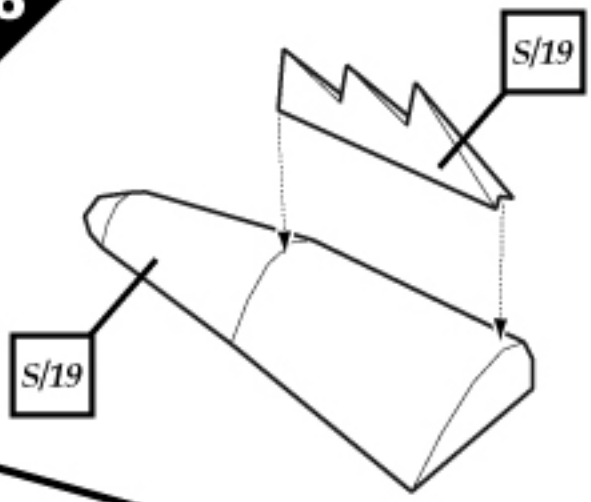

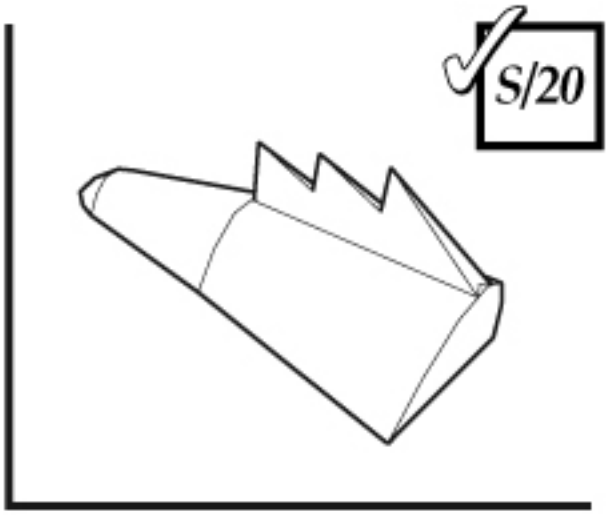

77

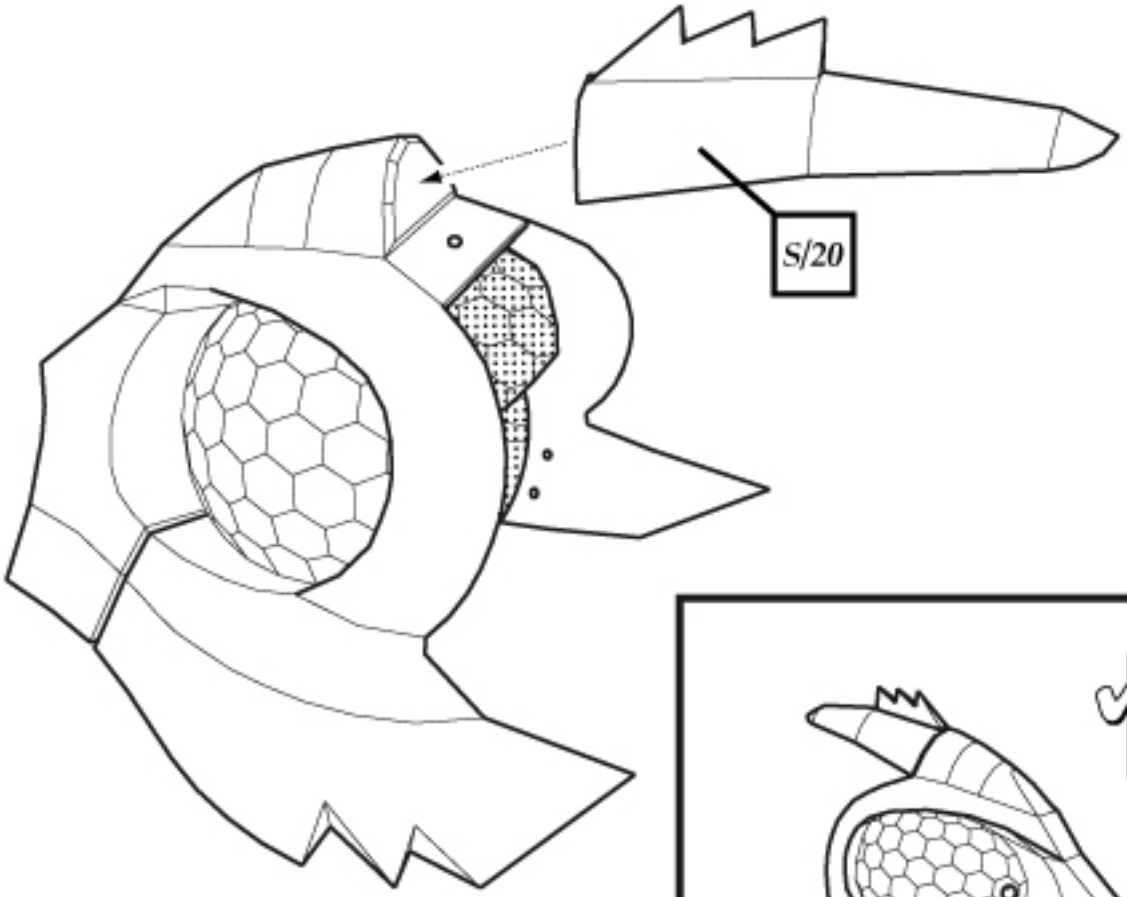

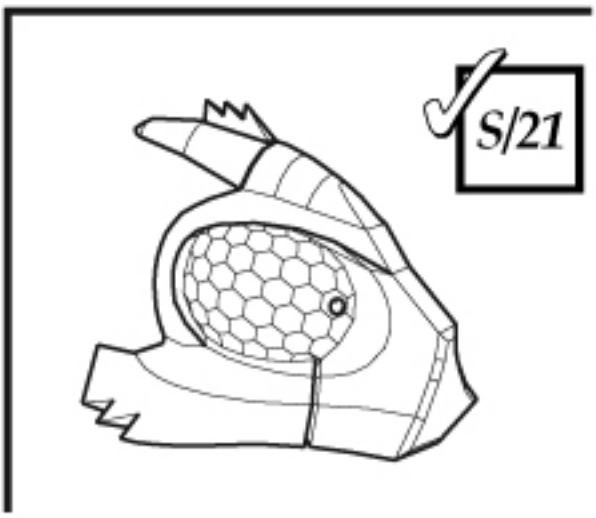

Mark Paper Engineering © Glen Coleman 2012

78

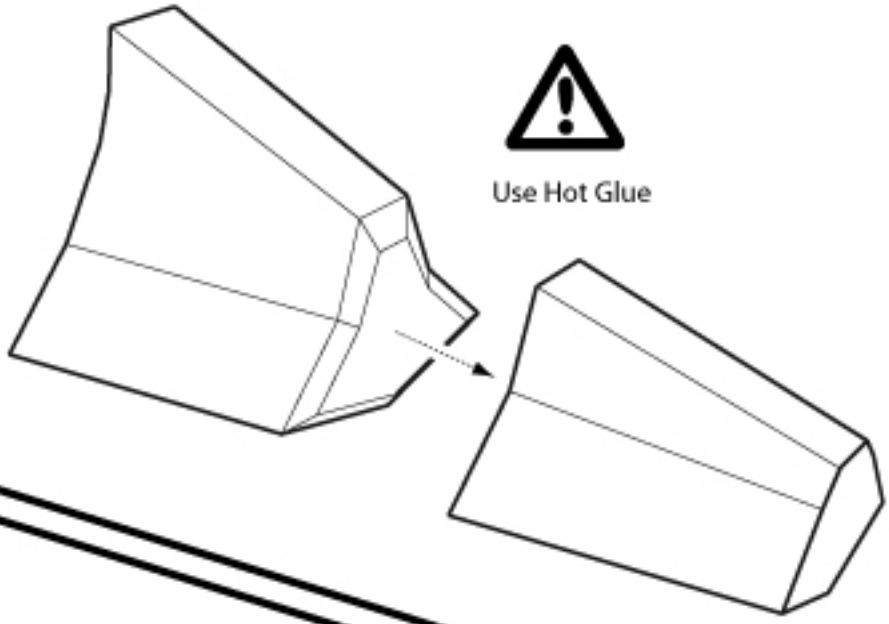

79

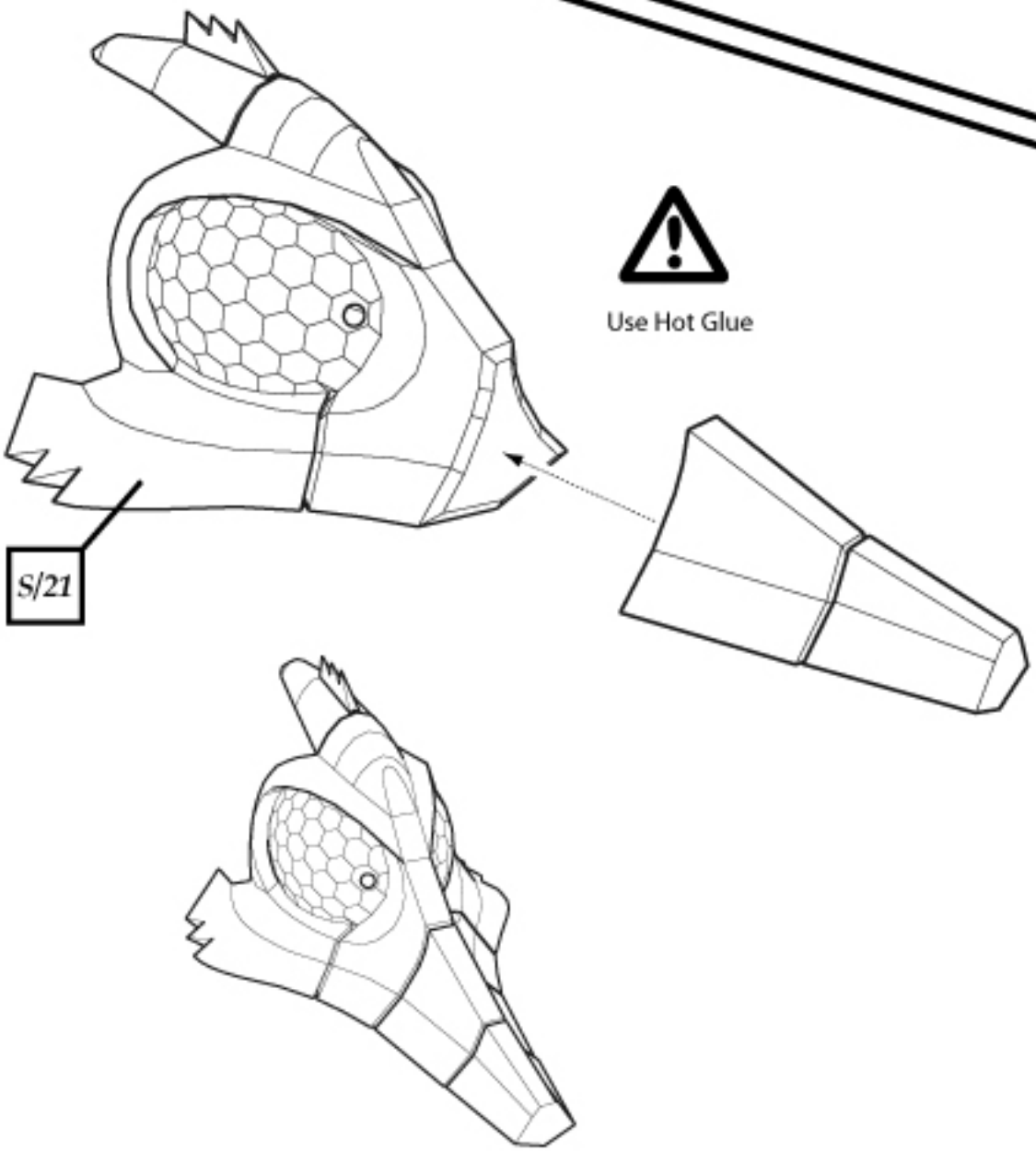

Assembly Instructions Artwork © Glen Coleman 2012

Mask Paper Engineering © Glen Coleman 2012

80

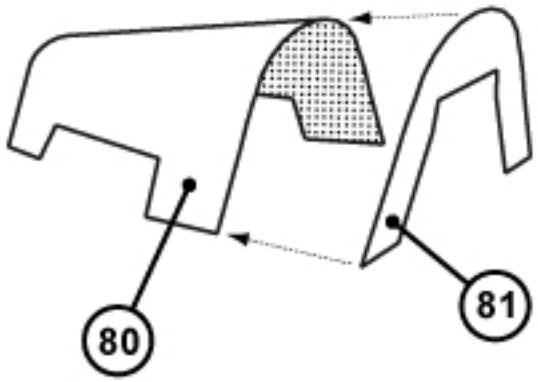

81

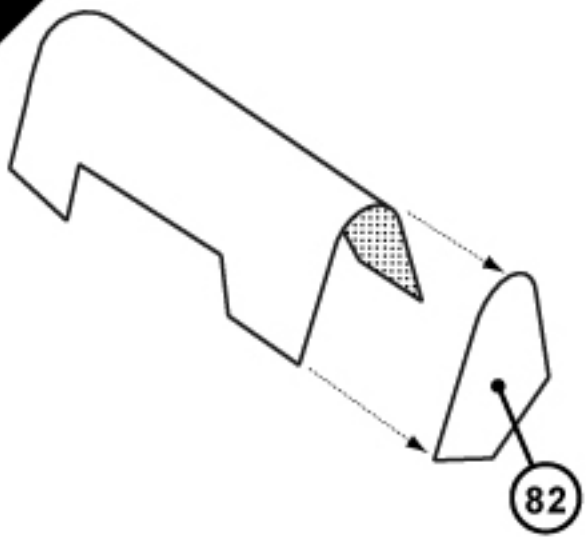

82

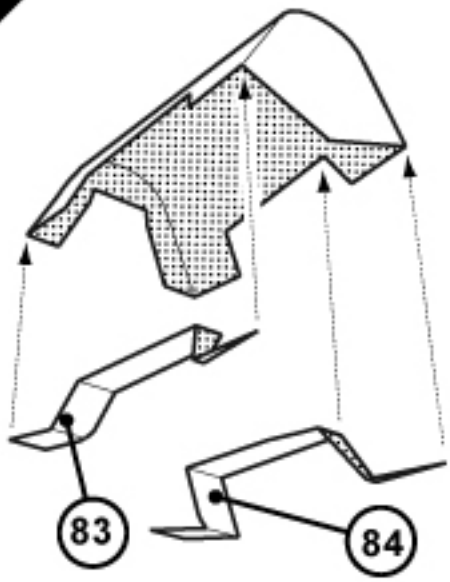

83

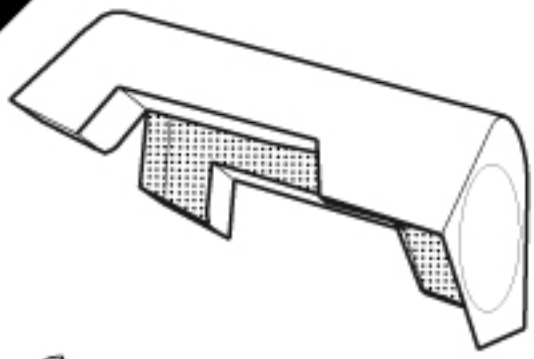

S/22

84

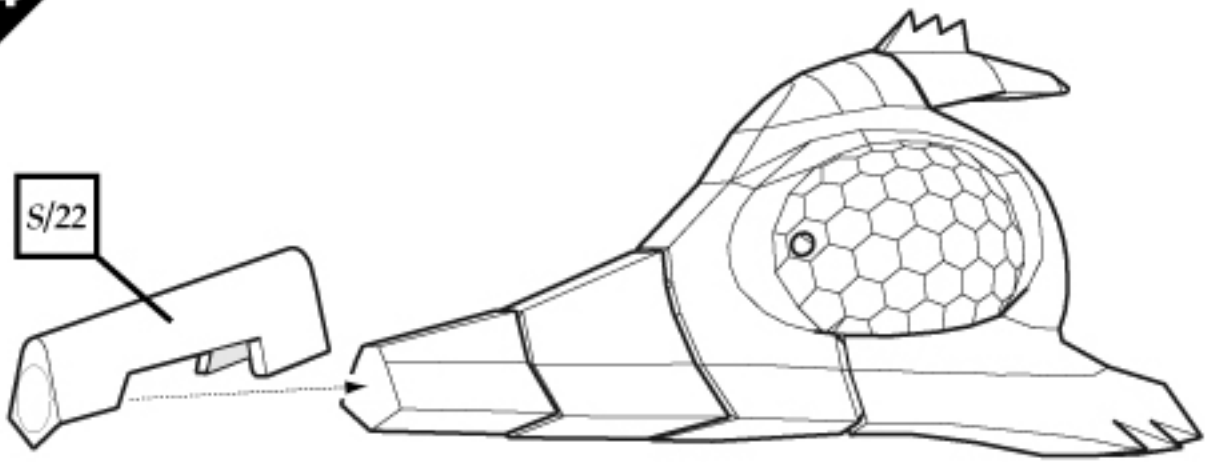

Mark Paper Engineering © Glen Coleman 2012

85

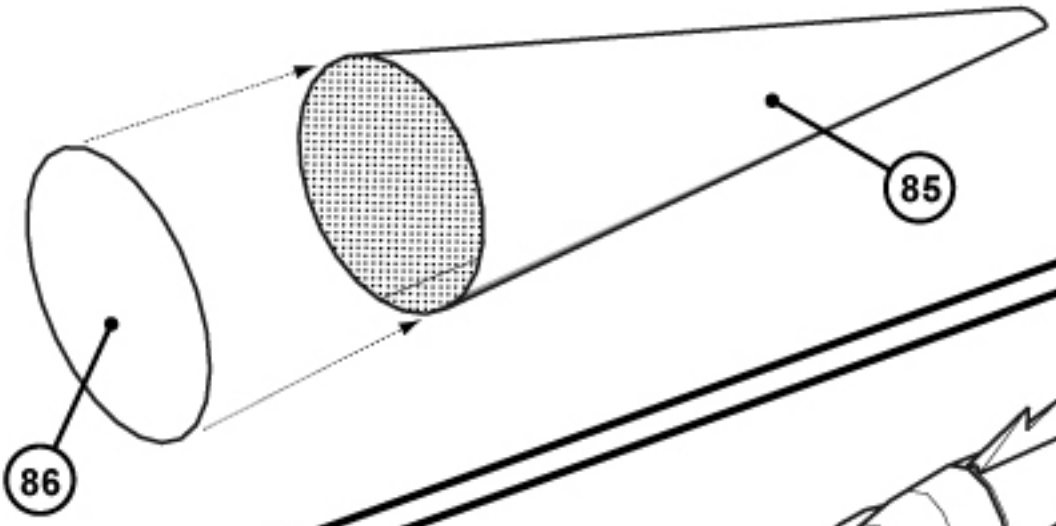

86

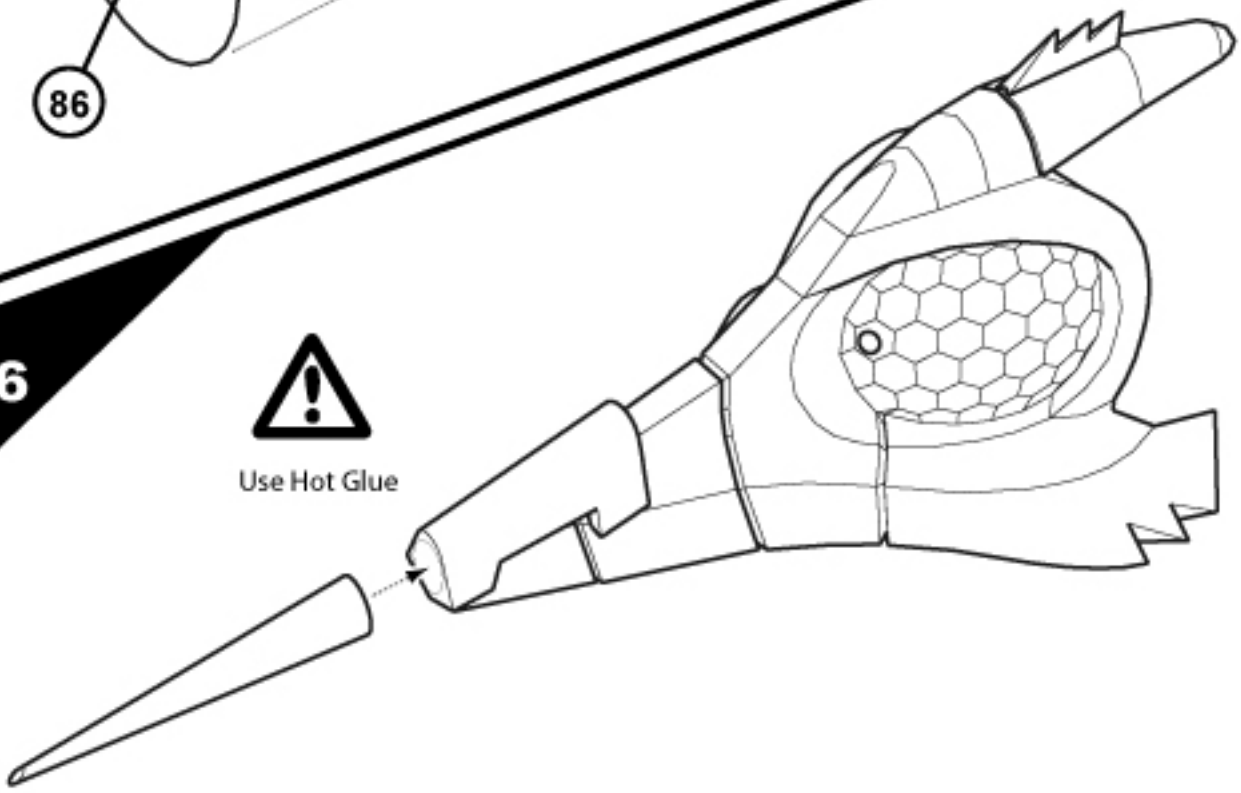

87

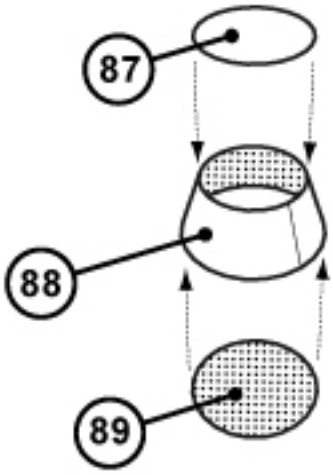

88

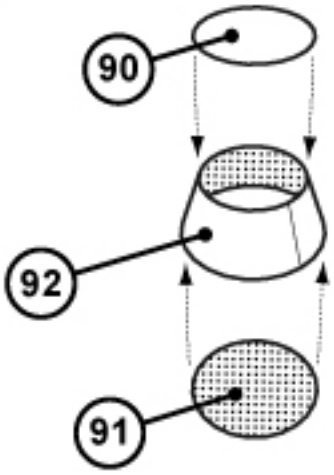

Assembly Instructions Artwork © Glen Coleman 2012

Mark Paper Engineering © Glen Coleman 2012

89

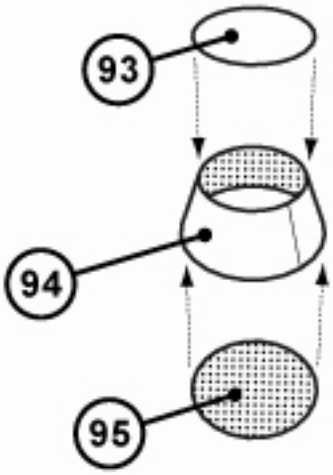

90

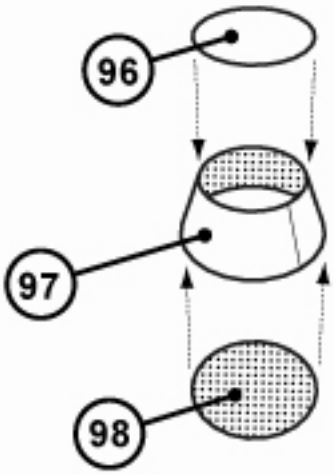

91

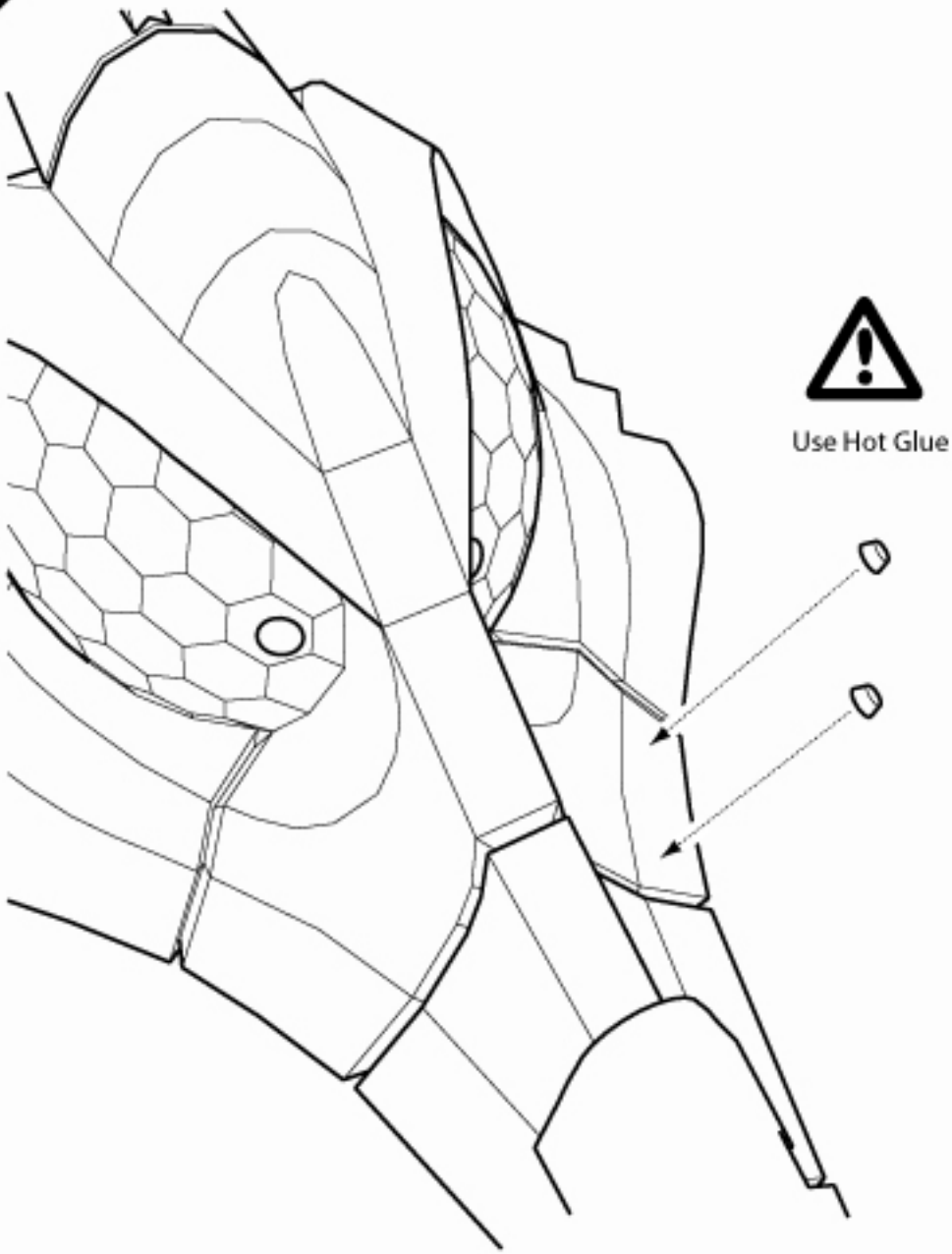

Mask Paper Engineering © Glen Coleman 2012

92

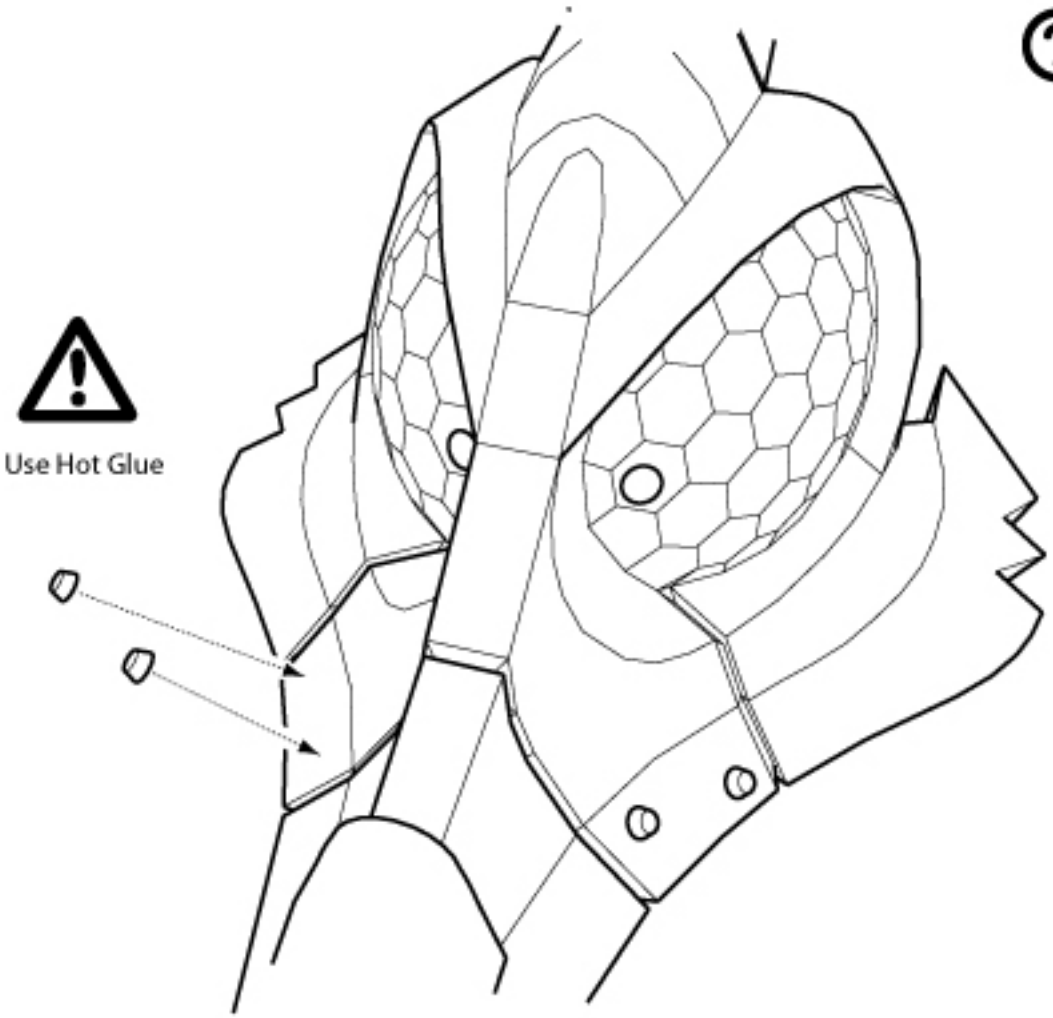

93

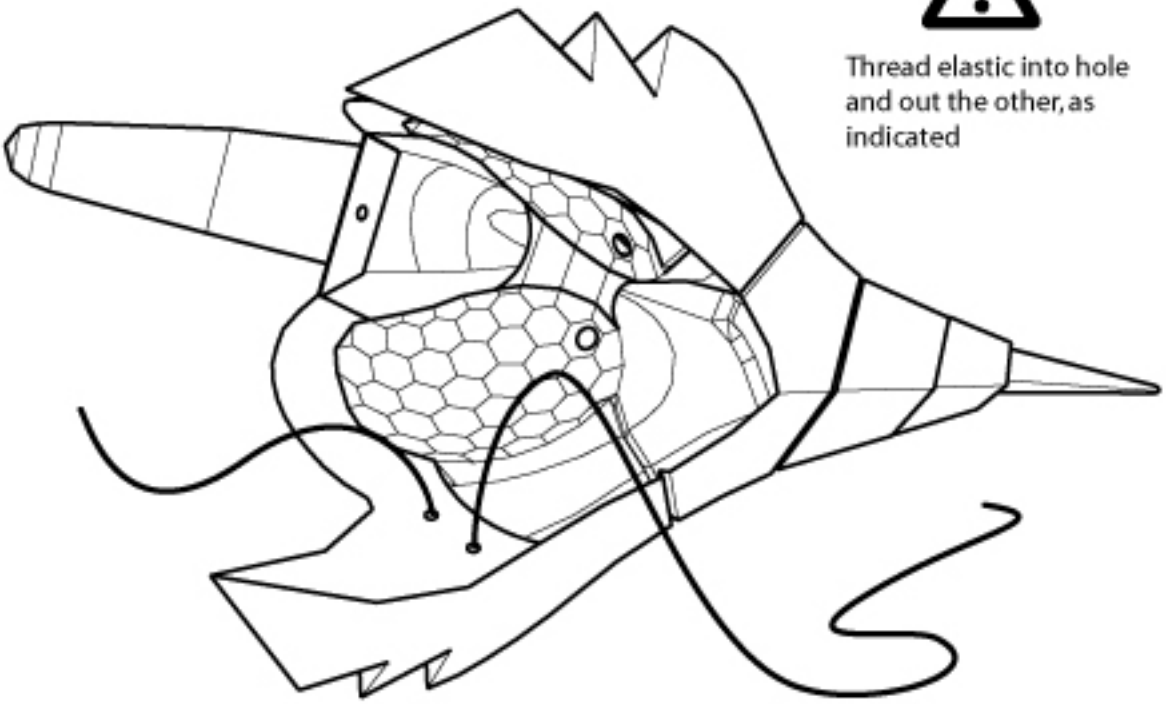

Assembly Instructions Artwork © Glen Coleman 2012

Thread elastic into hole and out the other on the opposite side , as indicated

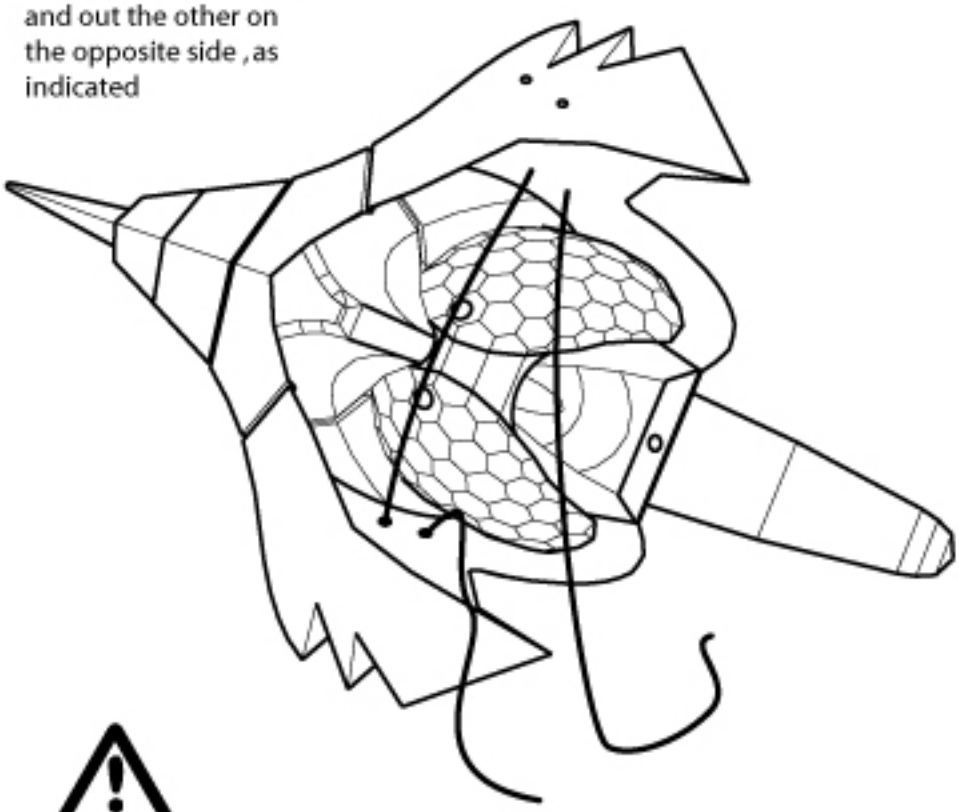

Tie ends together and thread the excess elastic up through the hole at the top and tie ends together as indicated.
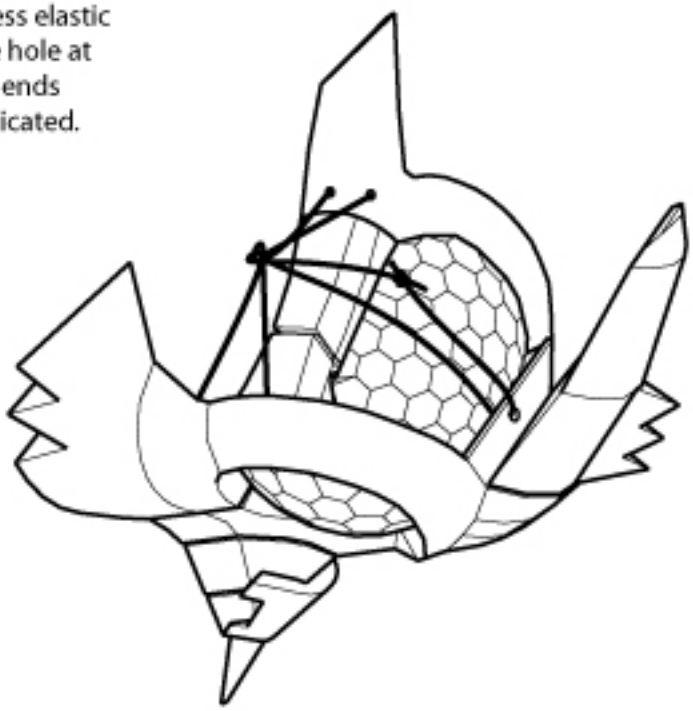
Adjust to fit.